D2D-CMxBPxMT - Vertical Mount - Butted Panels - Mitred Tracks

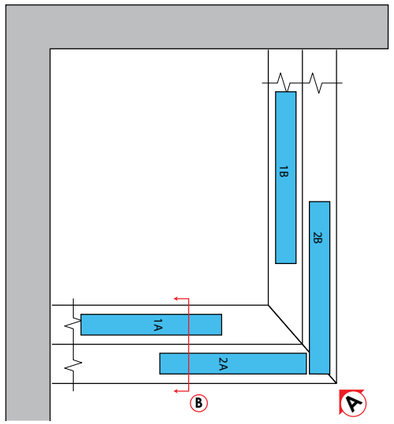

ELEVATION A

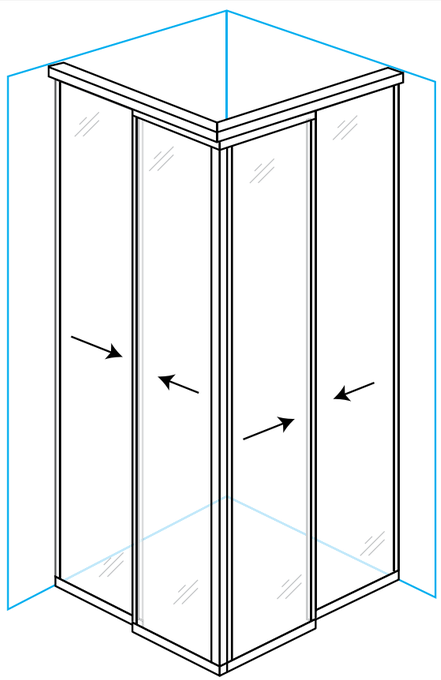

SEE INSTALLATION INSTRUCTIONS FOR CORNER DETAILS

PROJECT:

ARCHITECT:

Riviera
rivieraglassdividers.com

ALLIANCE GLASS DOORS INC.
Surrey, BC, Canada, V3W 1A2
T: 604.501.2588
F: 604.501.1608

SECTION B

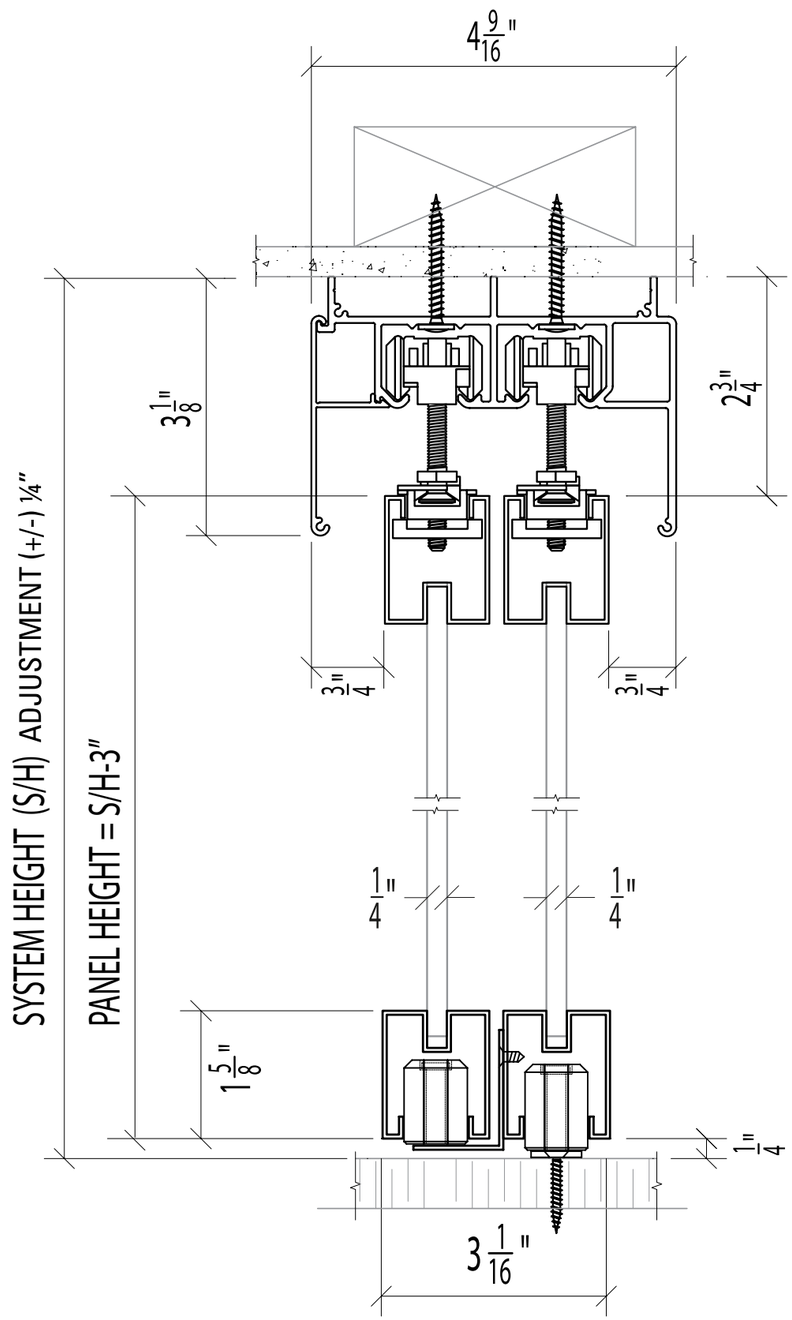

MONACO Mx-DCP* with Mx-DCP at 90°

Double Track - Vertical Mount - Floor Post with Carrier Post to Double Track - Vertical Mount - Floor Post with Carrier Post

SYSTEM PARTS

CUSHION CAPTURE ROLLER ASSEMBLY
(SHOWN WITH SINGLE TOP TRACK)

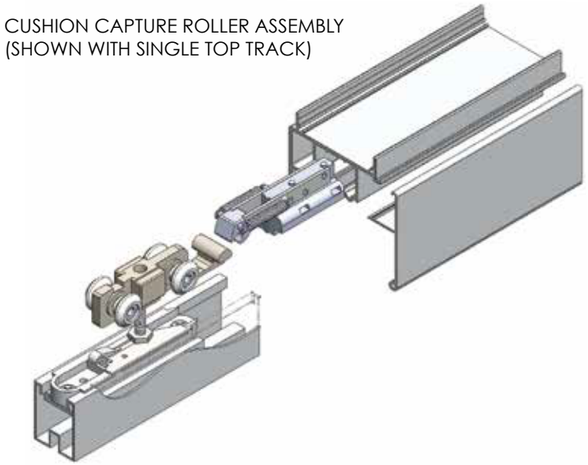

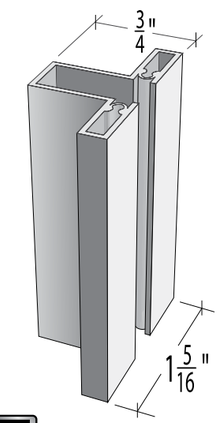

T LINE STANDARD STILE

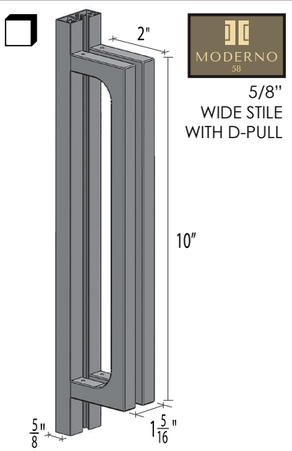

MODERNO 58

5/8" WIDE STILE WITH D-PULL

* FLOOR POST

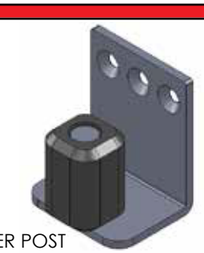

CARRIER POST

STANDARD INSERTS

- ❒ DIFFUSED WHITE LAMI GLASS
- ❒ CLEAR LAMINATED GLASS
- ❒ MIRROR
- ❒ PREFINISHED HARDBOARD
- ❒ MIRROR / HARDBOARD

OPTIONAL PARTS

❒

BLACK ANODIZED FINISH

❒

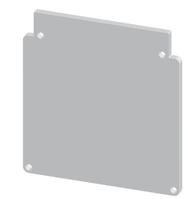

SINGLE TRACK END CAP

❒

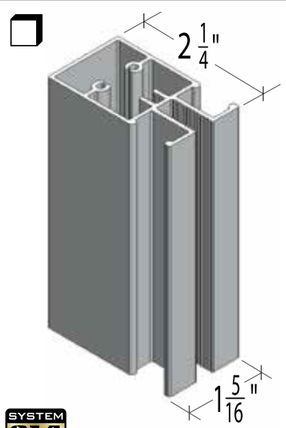

SYSTEM 214 2-1/4" WIDE STILE

❒

SYSTEM 214 LOCK

❒

SYSTEM 214 EDGE PULL

SPECIAL INSERTS

- ❒ POLAR WHITE GLASS
- ❒ BLACK GLASS
- ❒ CUSTOMER SUPPLIED INSERT
- ❒ DIVISION BARS

SHEET:	JOB #:	DRAWN BY: JL	DATE: 11/08/20	CHECKED BY: DL

PLEASE NOTE: "x" in the product code refers to the stile options - Standard T LINE = "T" ; SYSTEM 214 = "214" MODERNO 58 = "M58"

Monaco - System Components

1 - Main Track
2 - Snap on Fascia
3 - Fixed Lite End Cap
4 - Cushion Capture
5 - Roller
6 - Roller Bumper
7 - Adjusting Bolt
8 - Hanger Lock
9 - Rail Cap
10 - Floor Post
11 - Carrier Post

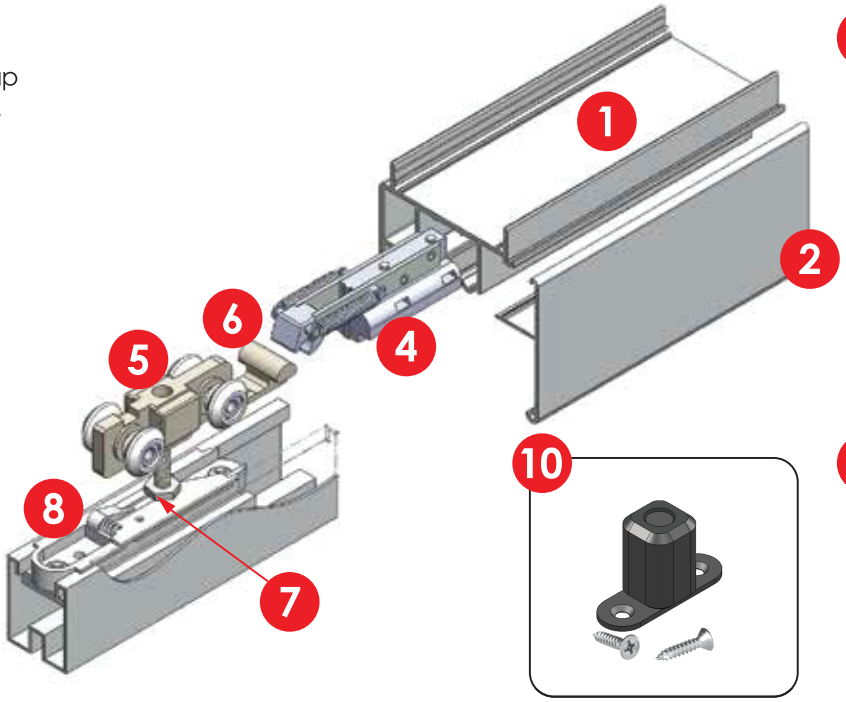

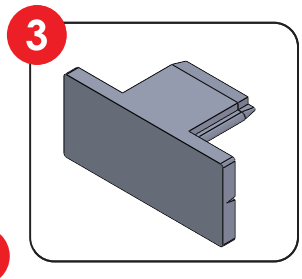

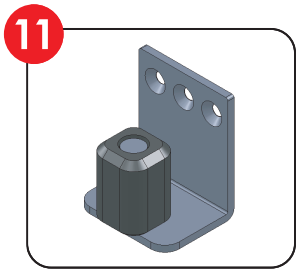

General
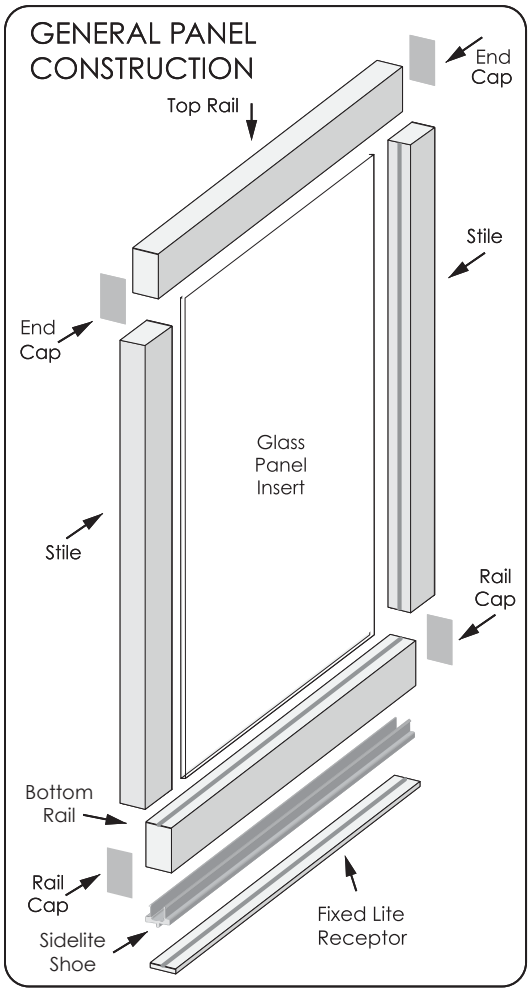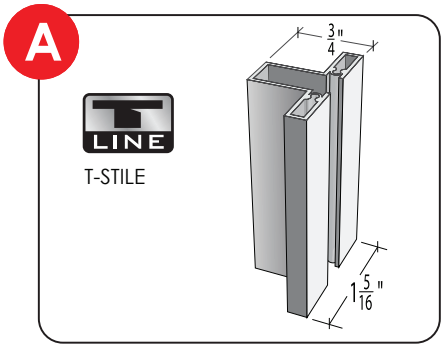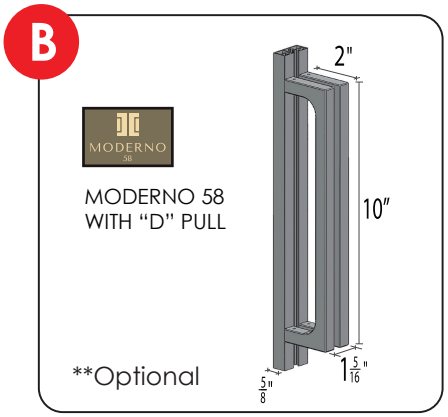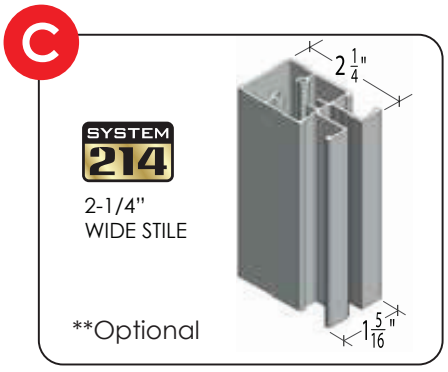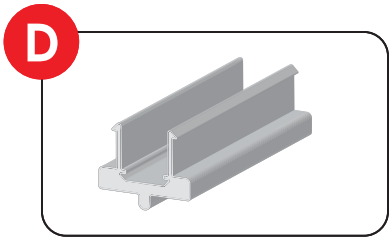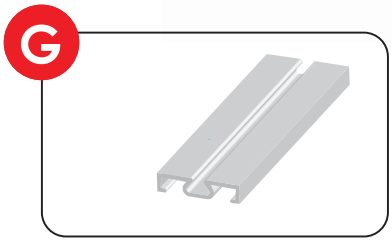
A - "T" Stile
B - Moderno 58 with D Shaped Pull **
C - System 214 Wide 2 1/4" Stile **
D - Sidelite Shoe
E - System 214 Lock
F - System 214 Edge Pull
G - Fixed Lite Receptor