S2T-CMxBPxMT - Vertical Mount - Butted Panels - Mitred Tracks

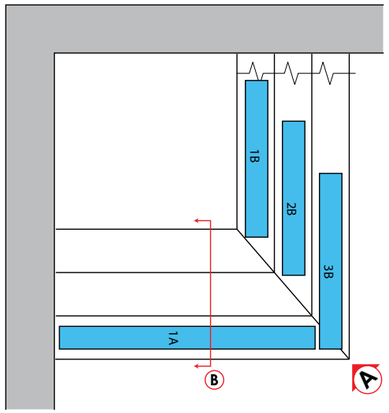

ELEVATION A

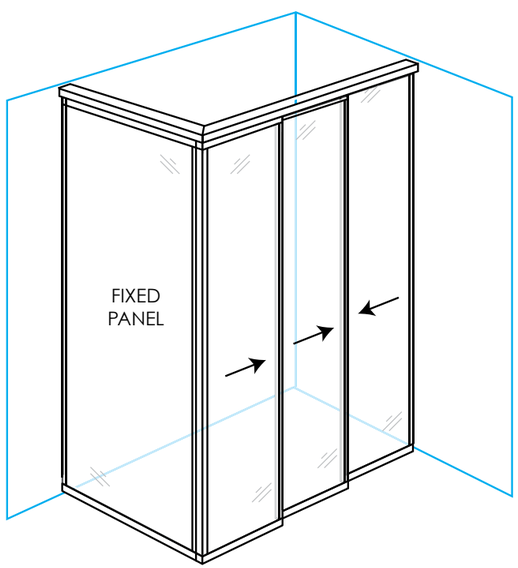

SEE INSTALLATION INSTRUCTIONS FOR CORNER DETAILS

PROJECT:

ARCHITECT:

Riviera
rivieraglassdividers.com

ALLIANCE GLASS DOORS INC.
Surrey, BC, Canada, V3W 1A2
T: 604.501.2588
F: 604.501.1608

SECTION B

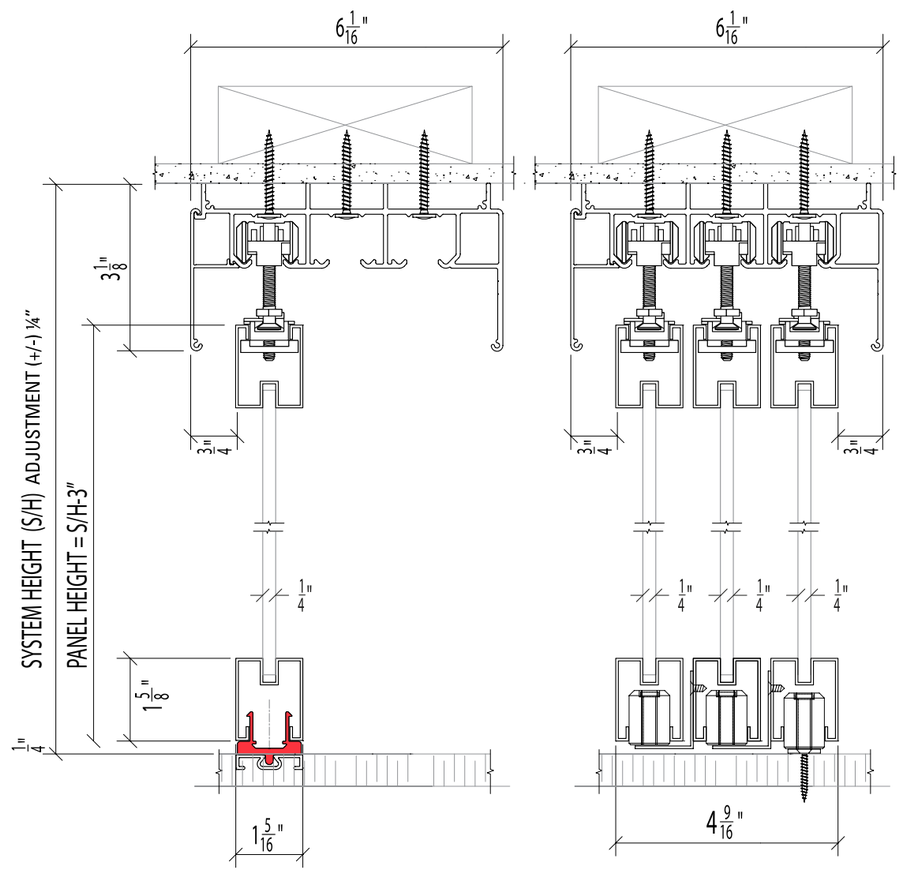

MONACO Mx-TCP* with Mx-SCP at 90˚

Triple Track - Vertical Mount - Fixed Shoe - to Triple Track - Vertical Mount - Floor Post with Carrier Post

SHEET:

JOB #:

SYSTEM PARTS

CUSHION CAPTURE ROLLER ASSEMBLY
(SHOWN WITH SINGLE TOP TRACK)

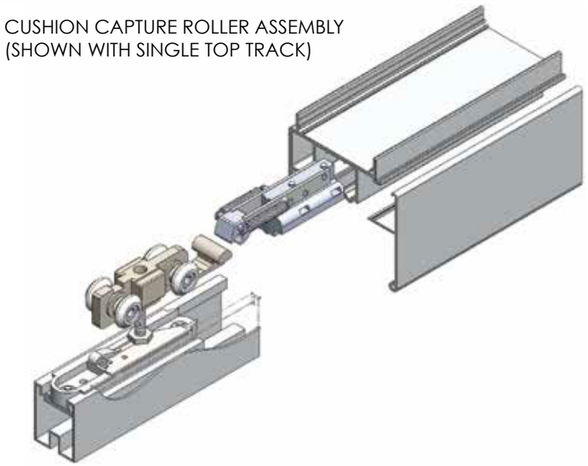

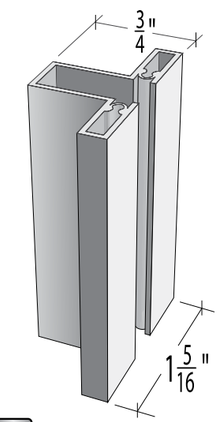

STANDARD STILE

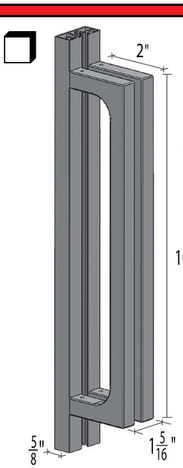

5/8" WIDE STILE WITH D-PULL

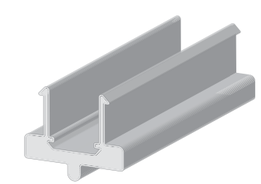

SIDELITE SHOE

2 X

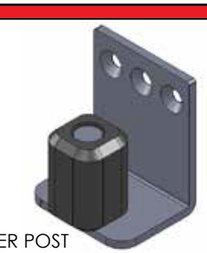

CARRIER POST

* FLOOR POST

STANDARD INSERTS

- ❒ DIFFUSED WHITE LAMI GLASS
- ❒ CLEAR LAMINATED GLASS
- ❒ MIRROR
- ❒ PREFINISHED HARDBOARD
- ❒ MIRROR / HARDBOARD

OPTIONAL PARTS

❒

BLACK ANODIZED FINISH

❒

SINGLE TRACK END CAP

❒

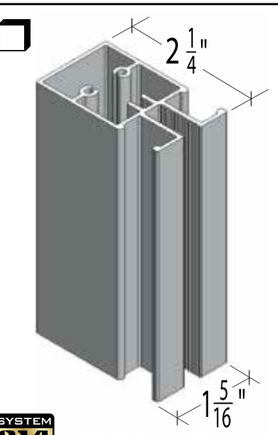

2-1/4" WIDE STILE

❒

LOCK

❒

EDGE PULL

SPECIAL INSERTS

- ❒ POLAR WHITE GLASS
- ❒ BLACK GLASS
- ❒ CUSTOMER SUPPLIED INSERT
- ❒ DIVISION BARS

DRAWN BY: JL

DATE: 08/11/25

CHECKED BY: DL

PLEASE NOTE: "x" in the product code refers to the stile options - Standard LINE = "T" ; SYSTEM 214 = "214" MODERNO = "M58"

The sidelite shoe (shown here in red) slots into the track in the fixedlite receptor below. The bottom rail of the panel fits over and down to sit directly on sidelite shoe by adjusting the top rollers. Cushion Capture stops in the top track are then pushed tight against the top rollers to eliminate panel travel.

Optional silicone sealant may be applied to the three aluminum componets at the floor.

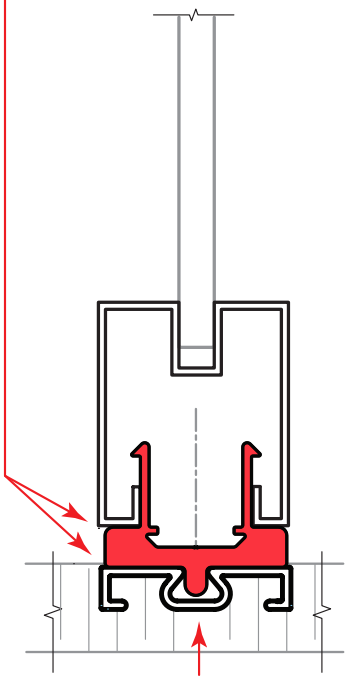

FIG.1 - FLUSH MOUNT

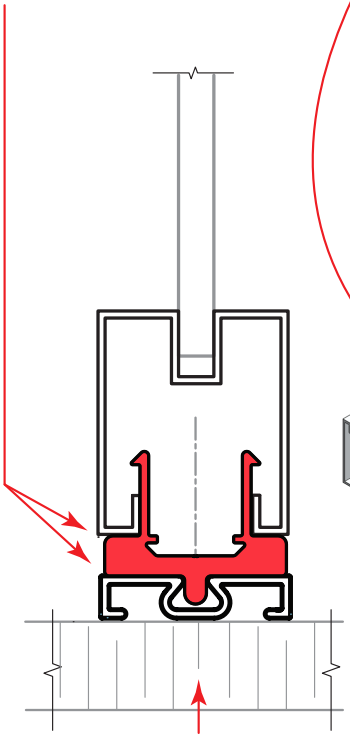

FIG. 2 - SURFACE MOUNT

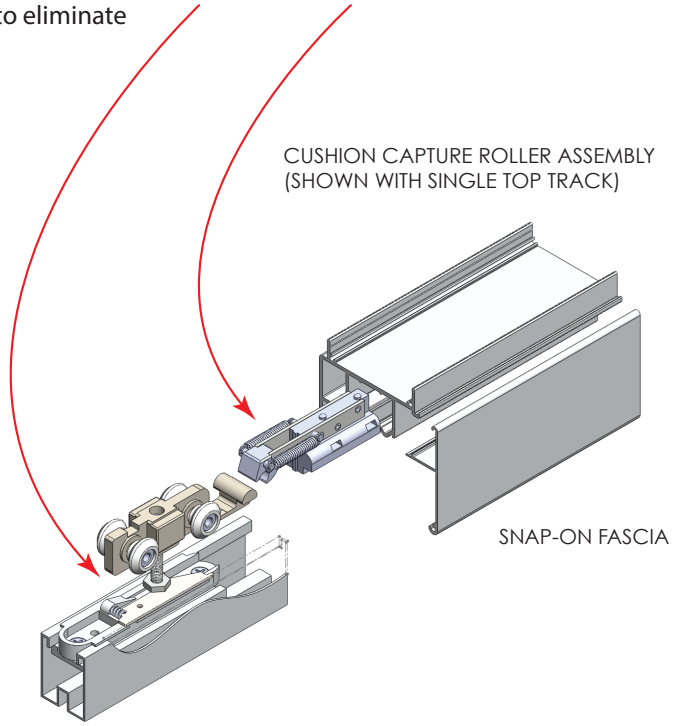

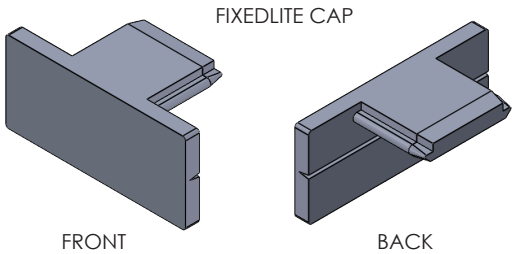

5/16" high fixedlite receptor must be installed on a firm surface using construction adhesive.

It can be installed:

1) Flush in the floor (FIG. 1)

2) On the floor surface (FIG. 2)

An endcap to cover the shoe and receptor will be provided.

Monaco - System Components

1 - Main Track
2 - Snap on Fascia
3 - Fixed Lite End Cap
4 - Cushion Capture
5 - Roller
6 - Roller Bumper
7 - Adjusting Bolt
8 - Hanger Lock
9 - Rail Cap
10 - Floor Post
11 - Carrier Post

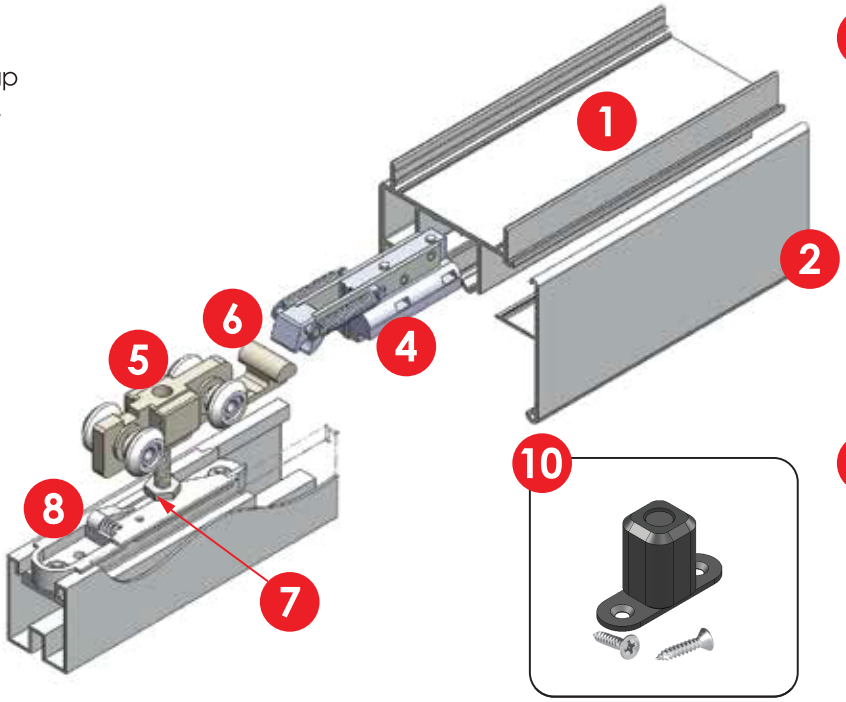

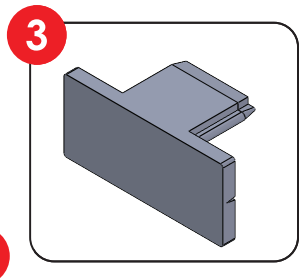

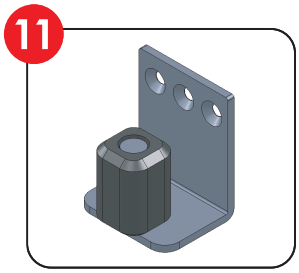

General

A - "T" Stile
B - Moderno 58 with D Shaped Pull **
C - System 214 Wide 2 1/4" Stile **
D - Sidelite Shoe
E - System 214 Lock
F - System 214 Edge Pull
G - Fixed Lite Receptor

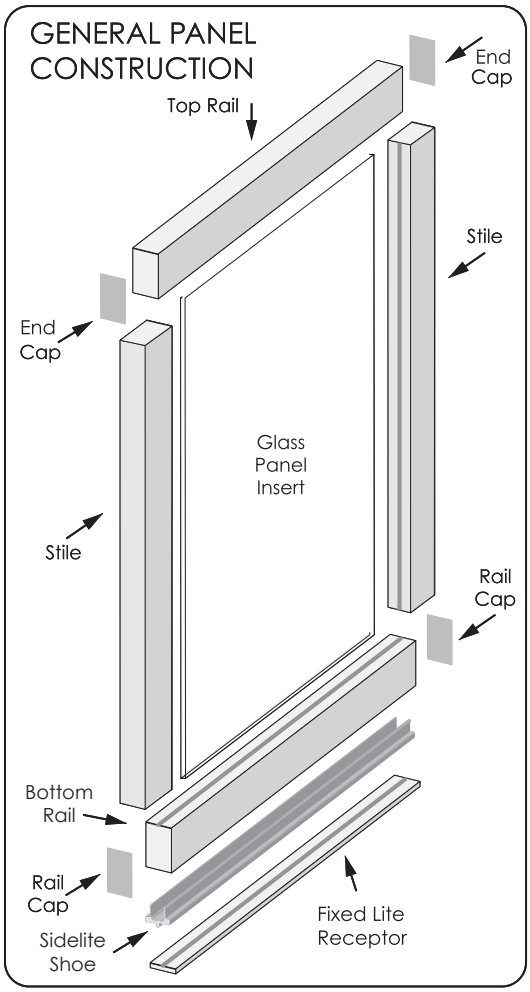

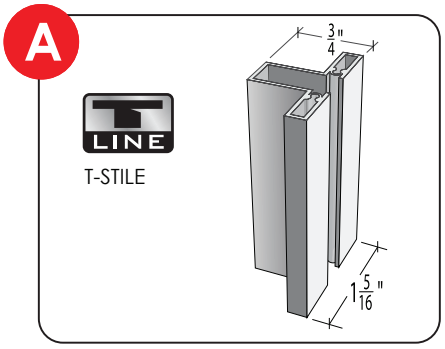

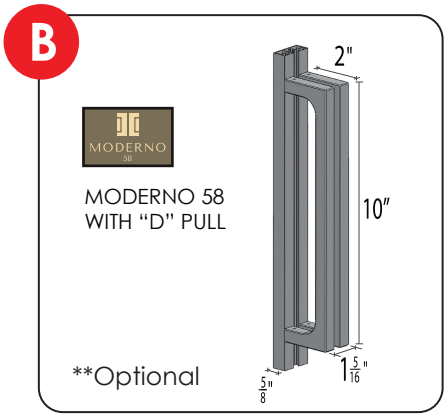

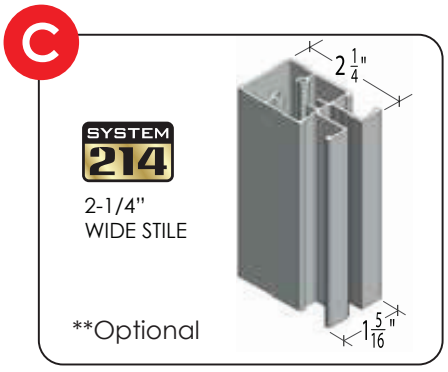

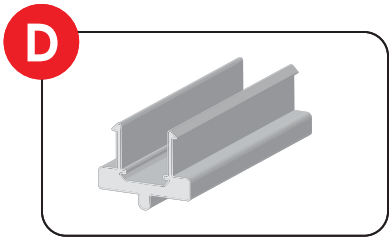

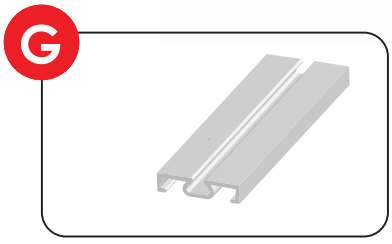

Riviera
rivieraglassdividers.com

COLLECTOR BLOCK INSTALLATION

Riviera Glass Divider "Collector Blocks" are designed to assist in closing multi-panel sets of sliding door panels by collecting each panel they pass by. When closing the set, the outermost panel will inter-lock with the next panel, and pull it along to its resting position. To re-open, with all required and recommended blocks installed, pushing the outermost panel will collect all panels as a group. Panels will be staggered in the fully open position.

Below you'll find instructions for installing the blocks. Pay close attention to identify your track series (Monaco or Savona), and the correct location and orientation on the panel. Peel and stick the block in place as illustrated, then install self tapping screws to permanently secure. Pre-drilling is not necessary.

IMPORTANT: Read these instructions completely before beginning any installation.

Block Location

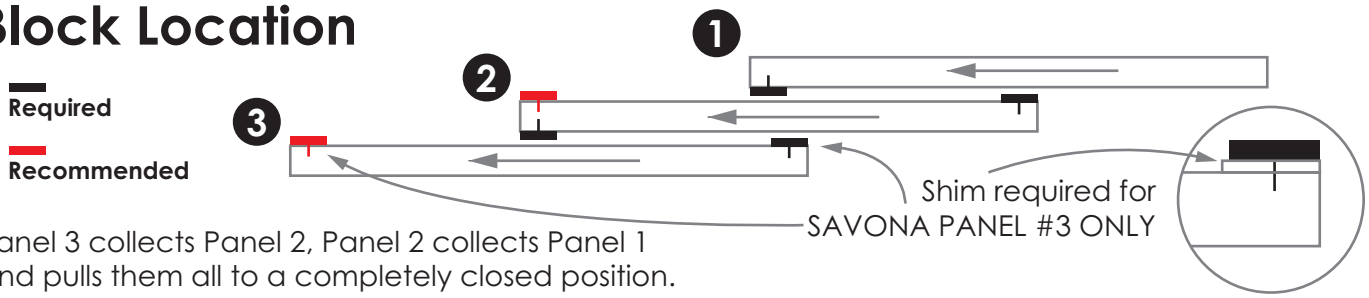

Panel 3 collects Panel 2, Panel 2 collects Panel 1 and pulls them all to a completely closed position.

Block Orientation MONACO

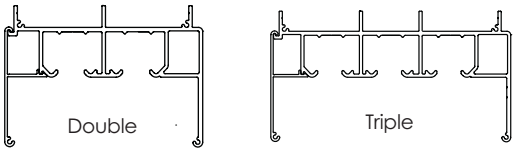

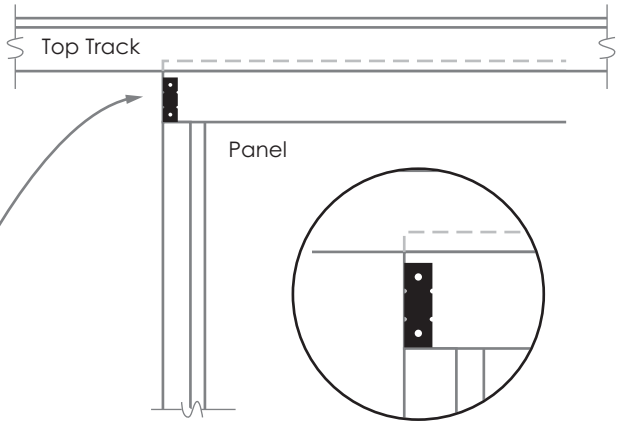

LONG EDGE of Block
Flush with end of Rail
@ Bottom of Rail

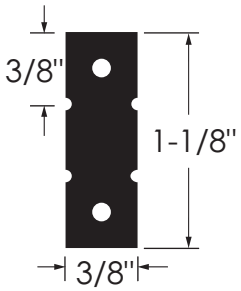

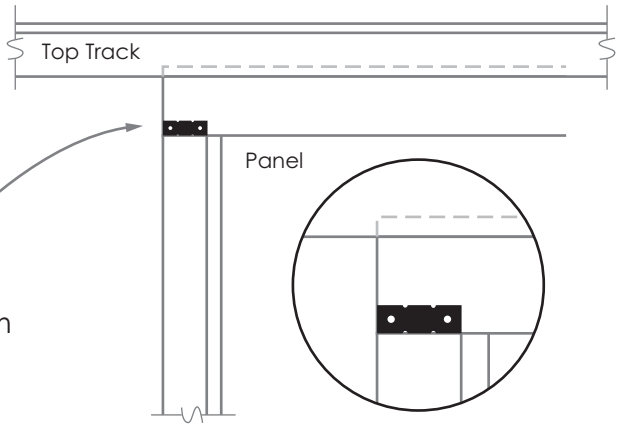

SHORT EDGE of Block
Flush with end of Rail
LONG EDGE @ Bottom
of Rail

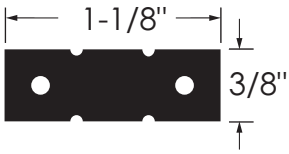

Block Orientation SAVONA

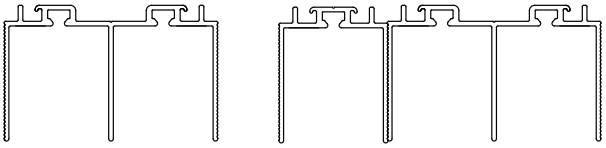

T LINE

MODERNO 58

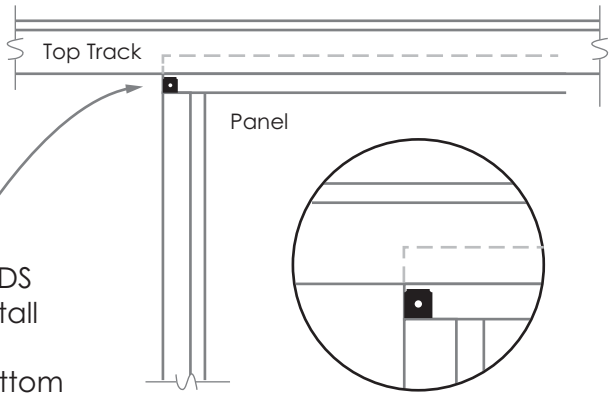

BREAK OFF BLOCK ENDS
to 3/8" x 3/8" then install
Flush with end of Rail
Bottom of Block @ bottom
of Rail... SHIM PANEL 3 ONLY

BREAK OFF at notches
to yield 2 Collector blocks
(discard middle section)

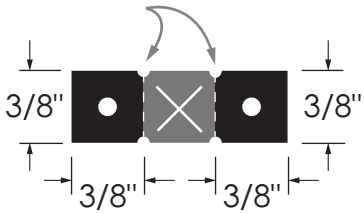

SYSTEM 214

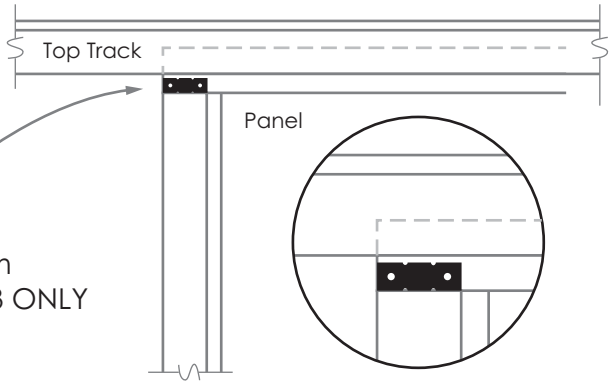
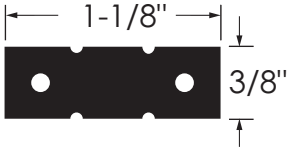
SHORT EDGE of Block
Flush with end of Rail
LONG EDGE @ Bottom
of Rail... SHIM PANEL 3 ONLY