Riviera
rivieraglassdividers.com

SPEC SHEET
Aluminum Framed Sliding Door
using **MONACO** Series Tracking

CUSHION CAPTURE ROLLER ASSEMBLY
(SHOWN WITH SINGLE TOP TRACK)

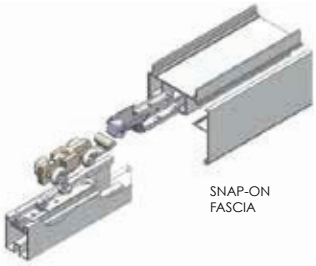

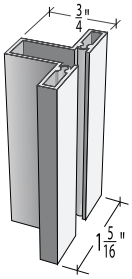

T-STILE

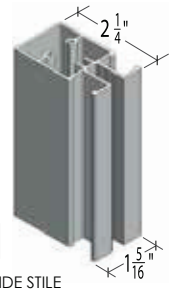

2-1/4" WIDE STILE

Track Type

- Monaco Series for top hung panels, Single, Double or Triple tracks
- Horizontally fastened (Wall Mount) or Vertically fastened (Header, Ceiling, Soffit Mount) to required solid backing
- Snap on fascia

Sliding System

- Quad wheel ball bearing top rollers (2 per panel) with vertical adjusting bolt
- Cushion Capture soft closing stops (2 per panel) standard
- Concealed bottom guide posts

Aluminum/Glass Panel Profile

"T" Stile Panel Frame (Standard)

Stile	3/4" width x 1 5/16" door thickness with full length face pull
Bottom Rail	1 1/2"" height
Top Rail	1 1/2" height
Standard Finish:	Clear Anodized
Optional Finish:	Black Anodized Black Powder Coated Paint
Division Bars:	Surface mount faux division bars - 1 1/2" x 1/8" for divided lite look

System 214 Panel Frame (Optional)

Stile	2 1/4" width x 1 5/16" Door Thickness with full length face pull optional 45˚ deg corner-meeting stile units
Bottom Rail	2 1/4" height standard, optional 1 1/2" height
Top Rail	1 1/2" height standard, optional 2 1/4" height
Standard Finish:	Clear Anodized
Optional Finish:	Black Anodized
Optional Lock:	In-stile sliding door lock - Keyed or Privacy functions
Division Bars:	Surface mount faux division bars - 1 1/2" x 1/8" for divided lite look

Maximum Panel Size

Width:	60"
Height:	108"

Glass

Translucent	
Standard	Clear Laminated Safety Glass O/A thickness 6mm with .015 PVB Interlayer
Standard	Diffused White Laminated O/A thickness 6mm with .015 PVB Interlayer
Opaque	
Optional	Pure White Laminated O/A thickness 6mm with .015 PVB Interlayer
Optional	White Back-Painted Safety Glass O/A thickness 6mm (3mm Cat 2 Vinyl Backing x 2)
Optional	Black Back-Painted Safety Glass O/A thickness 6mm (3mm Cat 2 Vinyl Backing x 2)
Other	
Optional	Customer supplied inserts

Application

Visit http://rivieraglassdividers.com/monaco/ for various plan layouts, link to shop drawings and link to installation instructions

ALLIANCE GLASS DOORS INC.
Surrey, BC, Canada V3W 1A2 • **T**: 604.501.2588 • **F**: 604.501.1608
info@rivieraglassdividers.com

05/14/20

Monaco - System Components

1 - Main Track
2 - Snap on Fascia
3 - Track End Cap
4 - Cushion Capture
5 - Roller
6 - Roller Bumper
7 - Adjusting Bolt
8 - Hanger Lock
9 - Rail Cap
10 - Floor Post
11 - Carrier Post

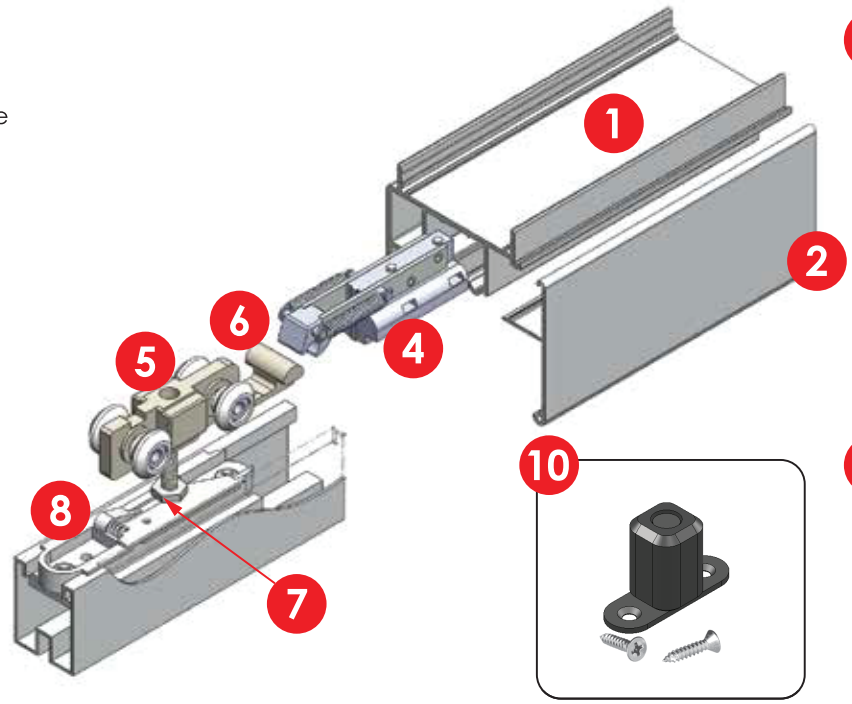

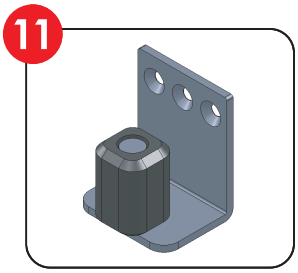

General
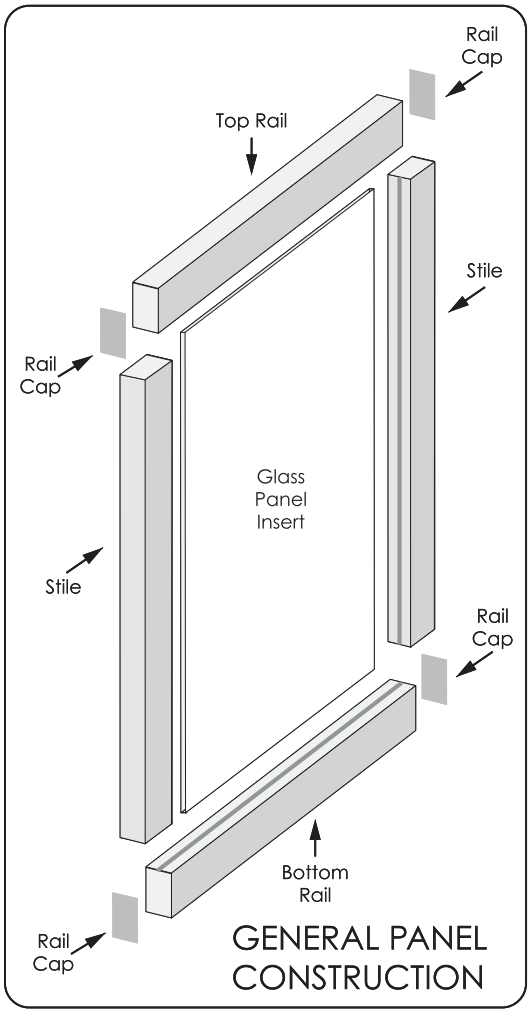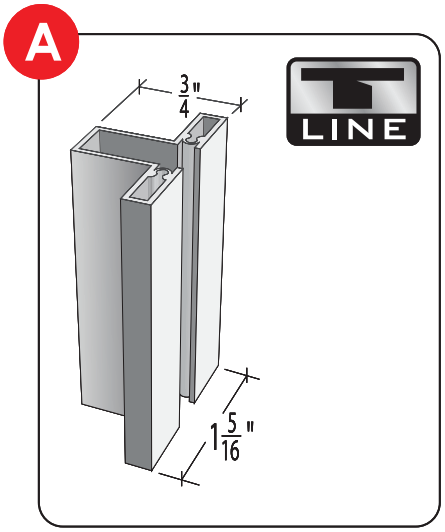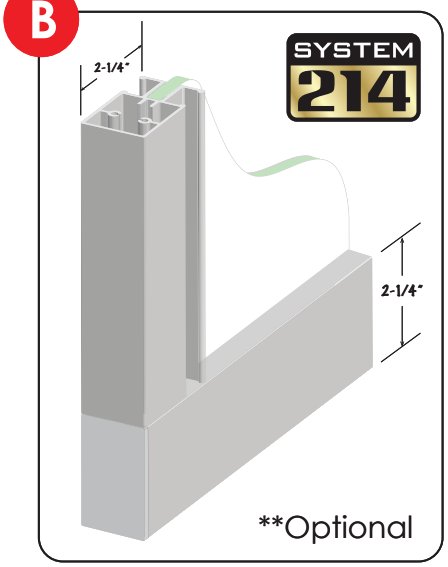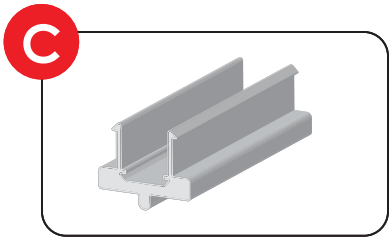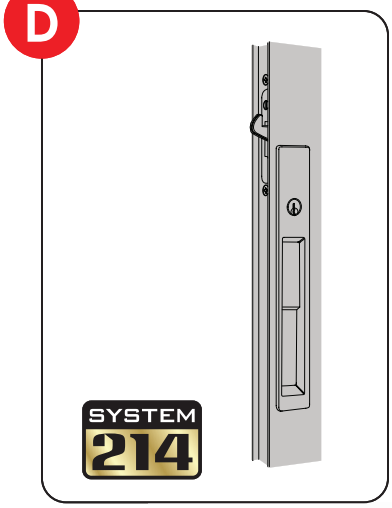
A - "T" Stile
B - System 214 Wide 2 1/4" Stile **
C - Sidelite Shoe
D - System 214 Lock
E - System 214 Edge Pull