Riviera
rivieraglassdividers.com

MONACO Installation Instructions - Butted Panels - Butted Tracks

Triple Track - Vertical Mount - Floor Post with Carrier Post to Single Track - Vertical Mount - Floor Post

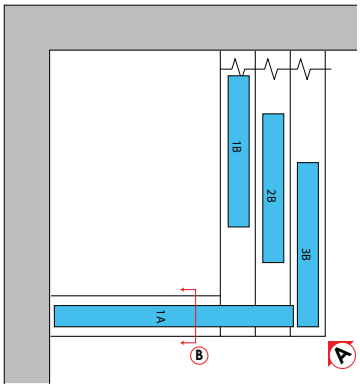

Monaco cushion capture stops are provided for both fully open and fully closed panel positions. In the fully closed position the stops aren't always at the end of the track.
They can be positioned further ahead or further back to retract or extend a panel as needed. In a corner applcation this allows for the two outermost panels to meet together when closed.

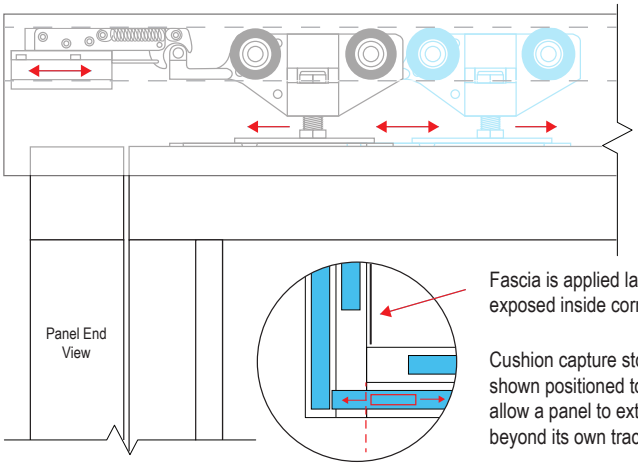

Fascia is applied last for exposed inside corners

Cushion capture stop shown positioned to allow a panel to extend beyond its own track

S2T-CMxBPxBT - Vertical Mount - Butted Panels - Butted Tracks

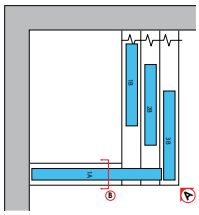

ELEVATION A

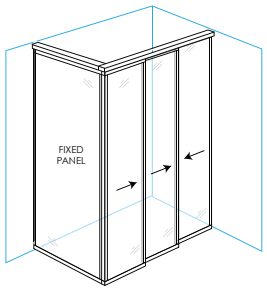

SEE INSTALLATION INSTRUCTIONS FOR CORNER DETAILS

PROJECT:

ARCHITECT:

Riviera
rivieraglassdividers.com
ALLIANCE GLASS DOORS INC.
Surrey, BC, Canada, V3W 1A2
T: 604.501.2588
F: 604.501.1608

SECTION B

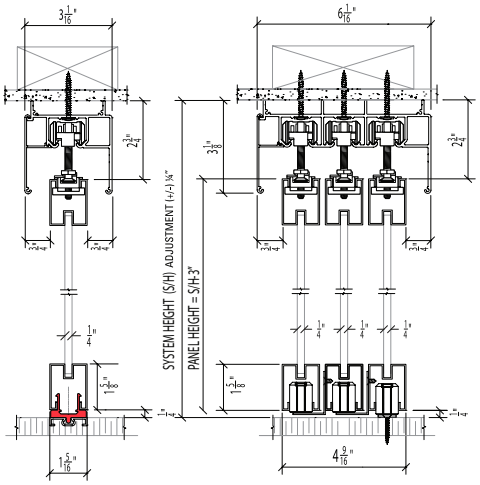

MONACO Mx-TCP* with Mx-SCP at 90°
Triple Track - Vertical Mount - Floor Post with Carrier Post to Single Track - Vertical Mount - Floor Post

SHEET:

JOB #:

SYSTEM PARTS

CUSHION CAPTURE ROLLER ASSEMBLY (SHOWN WITH SINGLE TOP TRACK)

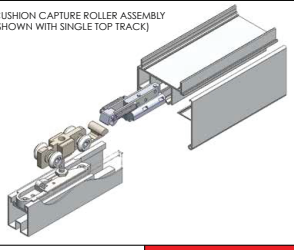

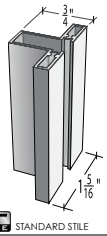

STANDARD STILE

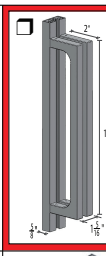

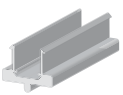

SIDELITE SHOE

2 X

CARRIER POST

* FLOOR POST

STANDARD INSERTS
- ❒ DIFFUSED WHITE LAMI GLASS
- ❒ CLEAR LAMINATED GLASS
- ❒ MIRROR
- ❒ PREFINISHED HARDBOARD
- ❒ MIRROR / HARDBOARD

OPTIONAL PARTS

❒ BLACK ANODIZED FINISH

❒ SINGLE TRACK END CAP

❒ 2 1/4" SYSTEM 214 2-1/4" WIDE STILE

❒ SYSTEM 214 LOCK

❒ SYSTEM 214 EDGE PULL

SPECIAL INSERTS
- ❒ POLAR WHITE GLASS
- ❒ BLACK GLASS
- ❒ CUSTOMER SUPPLIED INSERT
- ❒ DIVISION BARS

DRAWN BY: JL

DATE: 11/08/20

CHECKED BY: DL

PLEASE NOTE: "x" in the product code refers to the stile options - Standard = "T" ; SYSTEM 214 = "214" ; MODERNO = "M58"

The sidelite shoe (shown here in red) slots into the track in the fixedlite receptor below. The bottom rail of the panel fits over and down to sit directly on sidelite shoe by adjusting the top rollers. Cushion Capture stops in the top track are then pushed tight against the top rollers to eliminate panel travel.

Optional silicone sealant may be applied to the three aluminum componets at the floor.

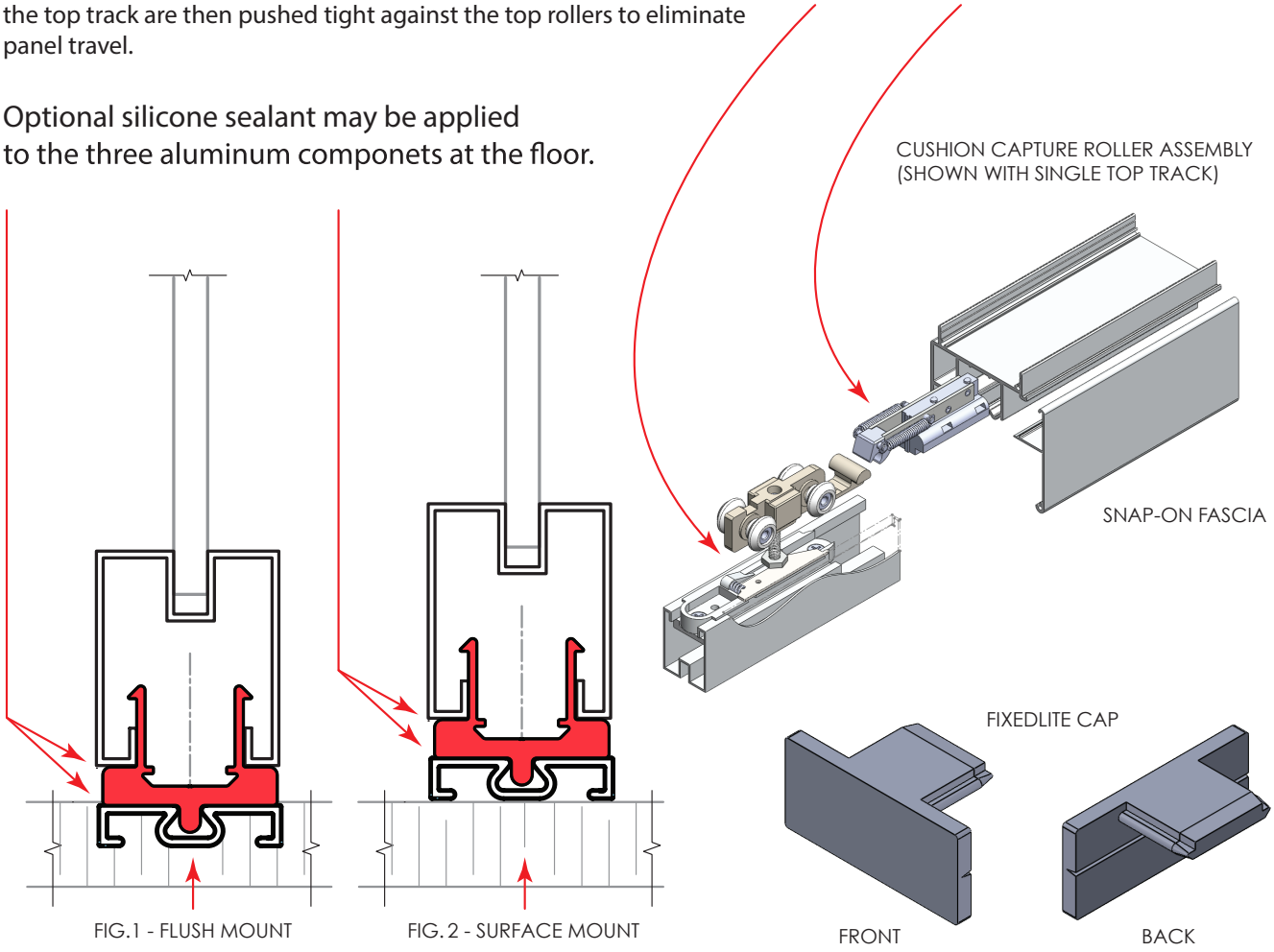

FIG.1 - FLUSH MOUNT

FIG. 2 - SURFACE MOUNT

5/16" high fixedlite receptor must be installed on a firm surface using construction adhesive.

It can be installed:

1) Flush in the floor (FIG. 1)

2) On the floor surface (FIG. 2)

An endcap to cover the shoe and receptor will be provided.

Monaco - System Components

1 - Main Track
2 - Snap on Fascia
3 - Fixed Lite End Cap
4 - Cushion Capture
5 - Roller
6 - Roller Bumper
7 - Adjusting Bolt
8 - Hanger Lock
9 - Rail Cap
10 - Floor Post
11 - Carrier Post

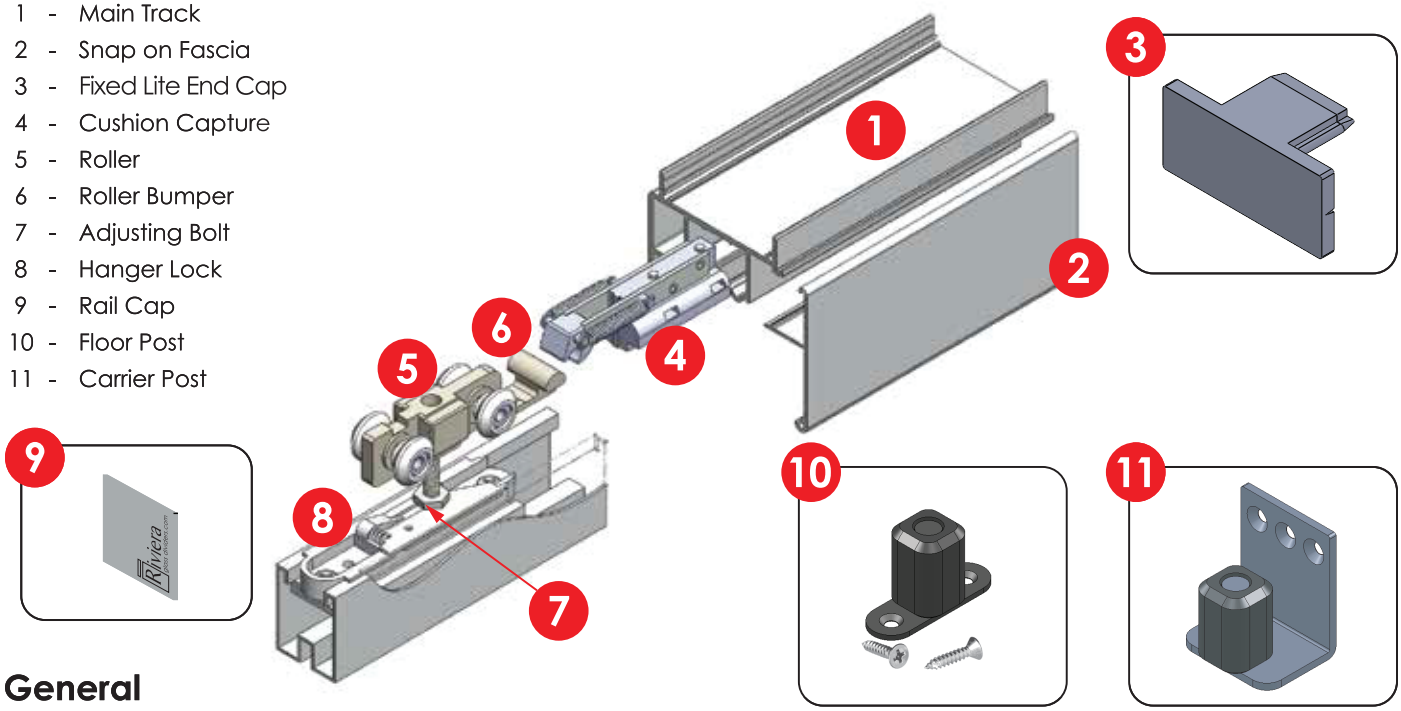

General

A - "T" Stile
B - Moderno 58 with D Shaped Pull **
C - System 214 Wide 2 1/4" Stile **
D - Sidelite Shoe
E - System 214 Lock
F - System 214 Edge Pull
G - Fixed Lite Receptor

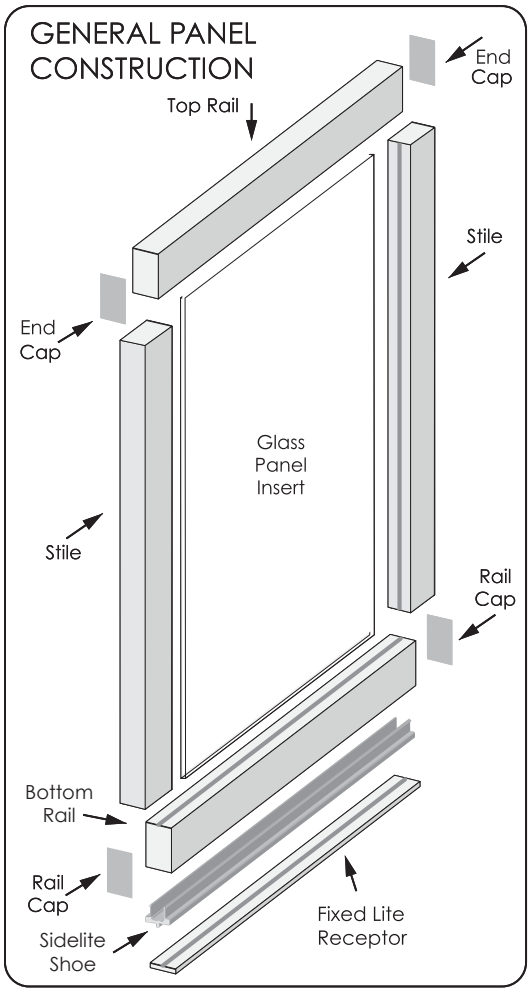

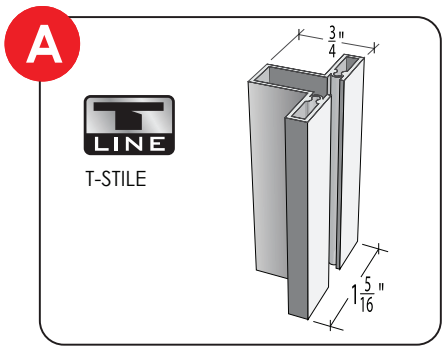

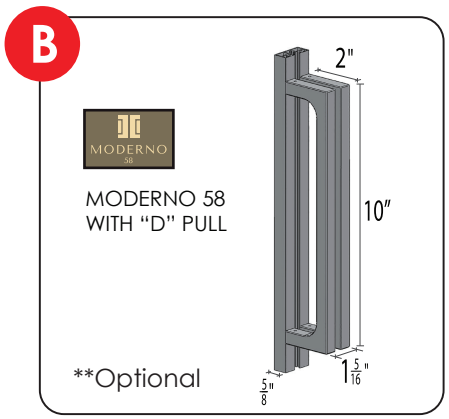

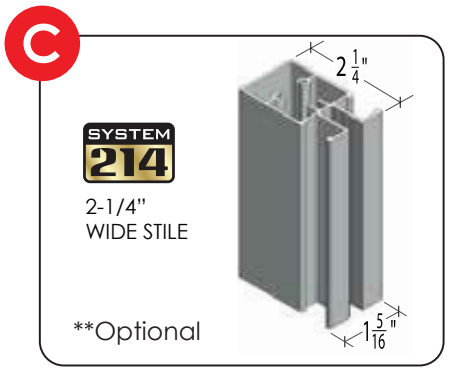

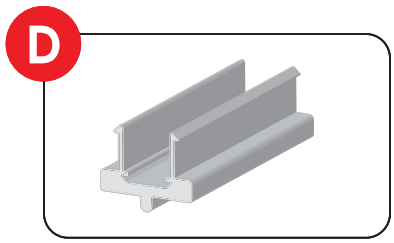

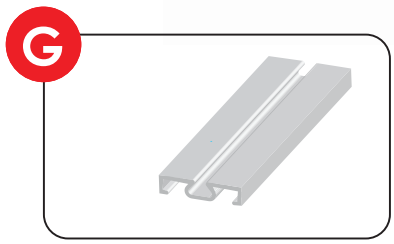

Riviera
rivieraglassdividers.com
T: 604.501.2588
F: 604.501.1608

MONACO Installation Instructions

Header, Ceiling, Soffit Mount

VERTICALLY FASTENED TOP TRACK - TRIPLE

IMPORTANT: Read these instructions completely before beginning any installation. Once the product is at the opening site and tools and parts are set up and ready to go, each panel should be able to be installed in 20 - 30 minutes.

A Install Top Track Main Portion

1. Measure track and using a power miter box (chop saw) trim both main track and fascia to length as required.
2. Mounting screws **MUST** be located into solid backing and spaced at approximately 24" - 32" centres including a fastener at each end of the track. Mark drill locations on the drill line between each top roller track, **drill and countersink** holes to match screws provided.
3. Install Cushion Capture and Rollers into track. Insure the roller bumper faces the Cushion Capture hook.
4. Position track across wall thickness keeping in mind the desired backset of fascia. Fasten track vertically to header, ceiling or soffit.

DON'T INSTALL FASCIA AT THIS TIME

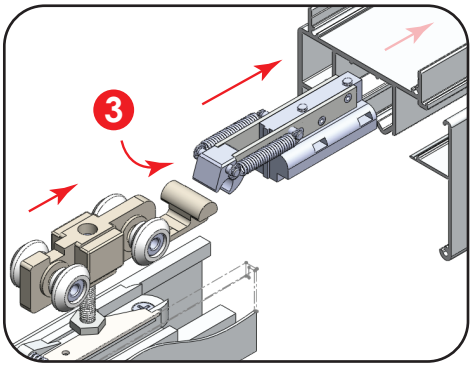

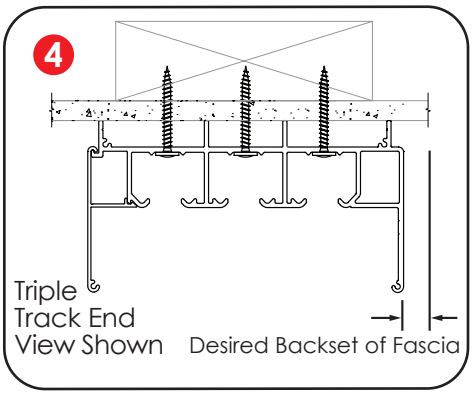

B Install Floor Post

5. Screw the FLOOR POST to the floor in front of the wall that the panel will slide over when open, so the leading EDGE of the post is 1/8" back from the vertical edge of the opening. The Post should be centred vertically under top roller track.

5.1 **ALTERNATE INSTALLATION:** If it is not desirable to screw into the floor, a CARRIER POST may be wall applied. Position as above however Carrier Post MUST be spaced 1/2" - 5/8" away from the Top Track mounting surface by fastening the Carrier Post to the baseboard or by using shims.

IMPORTANT NOTE:
Sliding Panel Rail End Cap should never come in contact with the Floor Post or Carrier Post. (See "**PANEL ADJUSTMENT**")

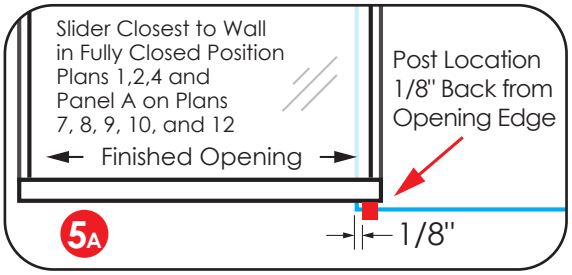

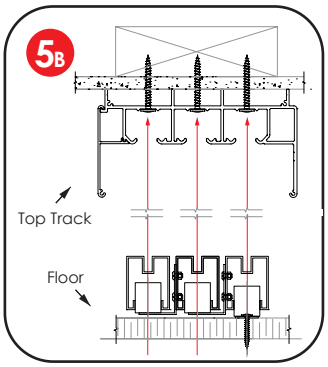

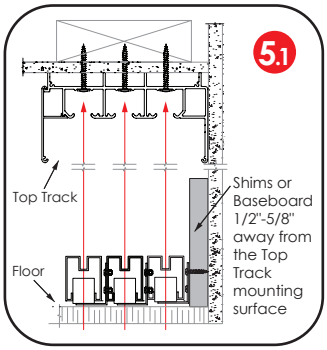

C Install Carrier Post

6 With short screws provided, mount the angled CARRIER POST to the outside face of Panel (A) bottom rail, in-line and flush with the panel leading edge rail cap and position vertically with the bottom of the cylindrical post 1/8" below the bottom the rail, to provide clearance for Panel (B) to slide over. Repeat carrier post installation on Panel (B) to guide Panel (C).

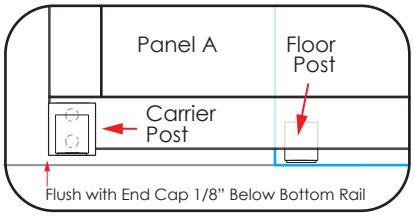

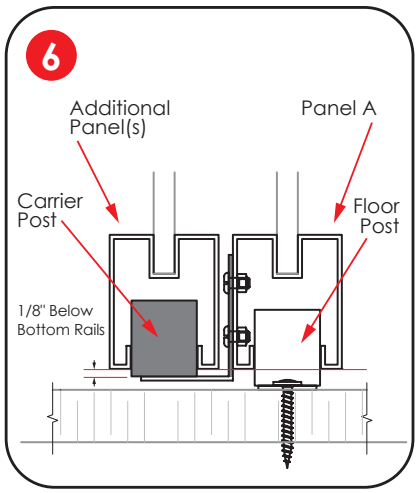

D Install the Panel

7 Ensure the Hanger Locks that are pre-installed in the panel rail are at the top of the panel(s).

SPECIAL NOTE: To achieve a panel stoping position in line with the end of the Cushion Capture assembly, the Roller Adjusting Bolt should engage the Hanger Lock spring 4 9/16" from the the end of the panel.

8 Set the panel rail over the floor or carrier post(s) at the floor.

9 Lift the panel(s) up and engage each roller adjusting bolt head into its hanger lock by pushing bolt against spring lock until it latches. Adjust roller bolt vertically using the combination wrench/screwdriver tool provided, to adjust floor clearance and vertically align panels with wall edge.

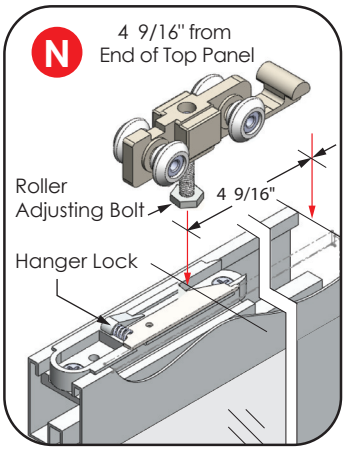

E Panel Adjustment

10 ***Adjust Cushion Capture and Hanger Lock horizontally such that the Bottom Rail Cap never comes in contact with the Floor or Carrier Posts.***

11 Panel stopping location can be fine tuned by loosening the two screws in the cushion capture mechanism and moving to desired position along the track.

12 Further adjustment can be achieved by adjusting the Hanger Lock position in the top rail. Loosen the two clamp screws using an 90 degree angled Philips screw driver.

13 Hook removable Fascia over main track and snap into place to top track.

14 Install track end caps to exposed track ends with the four #4 - 1/2" screws provided, using the wrench/screwdriver tool provided. (#0-Yellow Robertson drive tip)

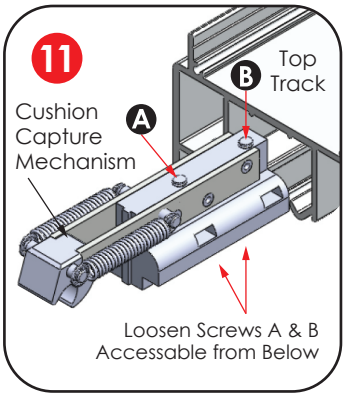

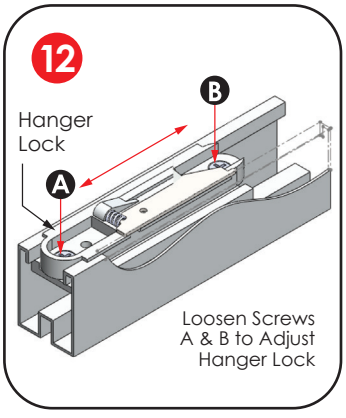

Riviera
rivieraglassdividers.com
T: 604.501.2588
F: 604.501.1608

MONACO Installation Instructions

Header, Ceiling, Soffit Mount
VERTICALLY FASTENED TOP TRACK - SINGLE

IMPORTANT: Read these instructions completely before beginning any installation. Once the product is at the opening site and tools and parts are set up and ready to go, each panel should be able to be installed in 20 - 30 minutes.

A Install Top Track Main Portion

1. Measure track and using a power miter box (chop saw) trim both main track and fascia to length as required.

2. Mounting screws **MUST** be located into solid backing and spaced at approximately 24" - 32" centres including a fastener at each end of the track. Mark drill locations on the drill line between each top roller track, **drill and countersink** holes to match screws provided.

3. Install Cushion Capture and Rollers into track. Insure the roller bumper faces the Cushion Capture hook.

4. Position track across wall thickness keeping in mind the desired backset of fascia. Fasten track vertically to header, ceiling or soffit.

DON'T INSTALL FASCIA AT THIS TIME

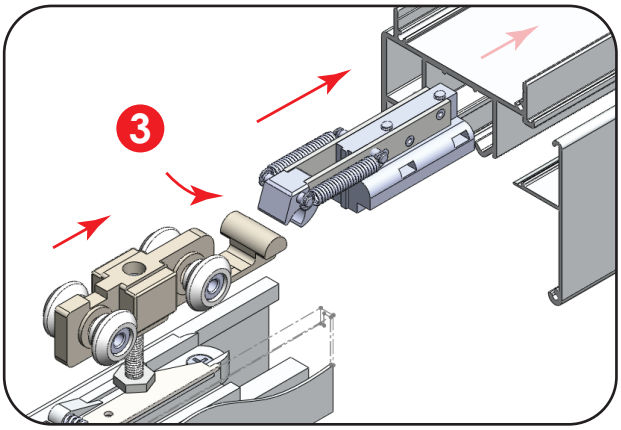

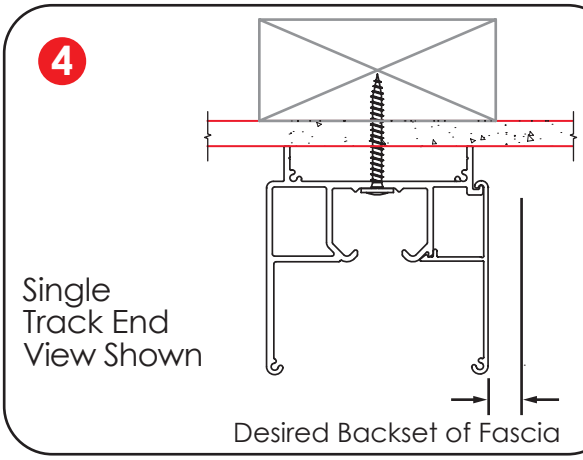

B Install Floor Post

5. Screw the FLOOR POST to the floor in front of the wall that the panel will slide over when open, so the leading EDGE of the post is 1/8" back from the vertical edge of the opening. The Post should be centred vertically under top roller track.

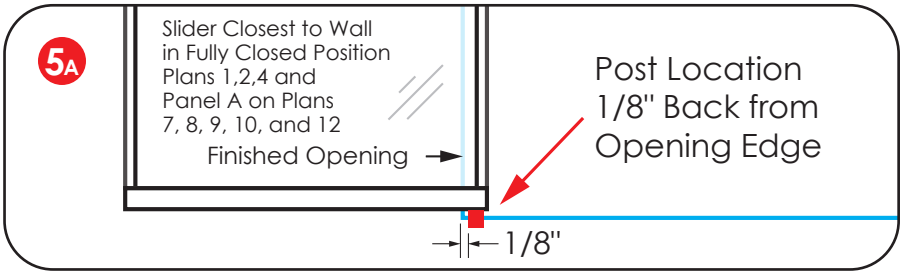

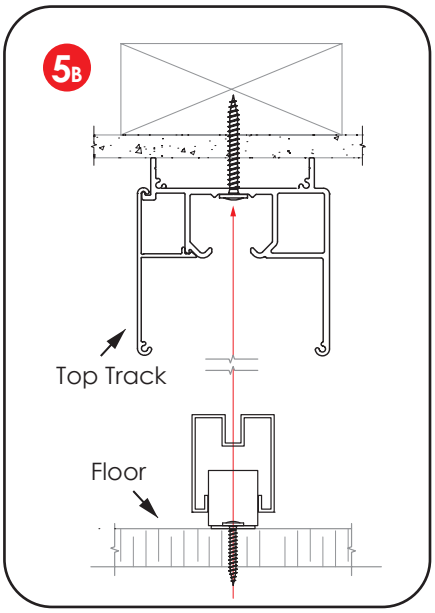

B Install Floor Post cont.

5.1 **ALTERNATE INSTALLATION:** If it is not desirable to screw into the floor, a CARRIER POST may be wall applied. Position as above however Carrier Post MUST be spaced 1/2" - 5/8" away from the Top Track mounting surface by fastening the Carrier Post to the baseboard or by using shims.

IMPORTANT NOTE: Sliding Panel Rail Cap should never come in contact with the Floor Post or Carrier Post. (See "**PANEL ADJUSTMENT**")

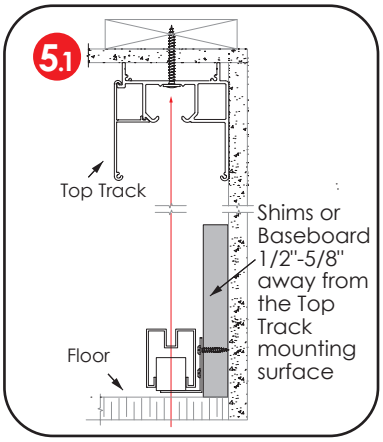

C Install the Panel

6 Ensure the Hanger Locks that are pre-installed in the panel rail are at the top of the panel(s).

SPECIAL NOTE: To achieve a panel stoping position in line with the end of the Cushion Capture assembly, the Roller Adjusting Bolt should engage the Hanger Lock spring 4 9/16" from the the end of the panel.

7 Set the panel rail over the floor or carrier post(s) at the floor.

8 Lift the panel(s) up and engage each roller adjusting bolt head into its hanger lock by pushing bolt against spring lock until it latches. Adjust roller bolt vertically using the combination wrench/screwdriver tool provided, to adjust floor clearance and vertically align panels with wall edge.

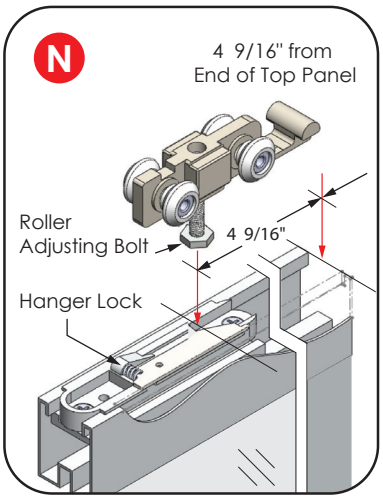

D Panel Adjustment

9 ***Adjust Cushion Capture and Hanger Lock horizontally such that the Bottom Rail Cap never comes in contact with the Floor or Carrier Posts.***

10 Panel stopping location can be fine tuned by loosening the two screws in the cushion capture mechanism and moving to desired position along the track.

11 Further adjustment can be achieved by adjusting the Hanger Lock position in the top rail. Loosen the two clamp screws using an 90 degree angled Philips screw driver.

12 Hook removable Fascia over main track and snap into place to top track.

13 Install track end caps to exposed track ends with the four #4 - 1/2" screws provided, using the wrench/screwdriver tool provided. (#0-Yellow Robertson drive tip)

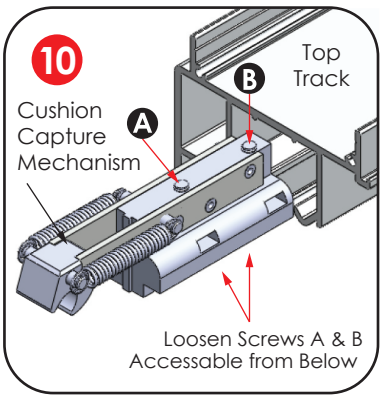

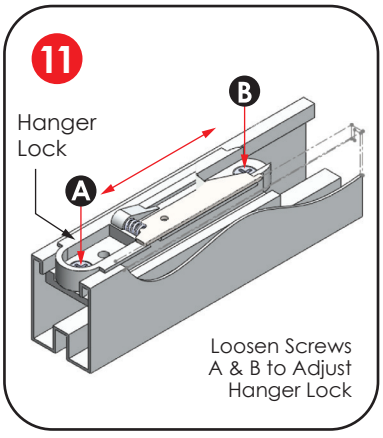

Riviera
rivieraglassdividers.com

COLLECTOR BLOCK INSTALLATION

Riviera Glass Divider "Collector Blocks" are designed to assist in closing multi-panel sets of sliding door panels by collecting each panel they pass by. When closing the set, the outermost panel will inter-lock with the next panel, and pull it along to its resting position. To re-open, with all required and recommended blocks installed, pushing the outermost panel will collect all panels as a group. Panels will be staggered in the fully open position.

Below you'll find instructions for installing the blocks. Pay close attention to identify your track series (Monaco or Savona), and the correct location and orientation on the panel. Peel and stick the block in place as illustrated, then install self tapping screws to permanently secure. Pre-drilling is not necessary.

IMPORTANT: Read these instructions completely before beginning any installation.

Block Location

Required

Recommended

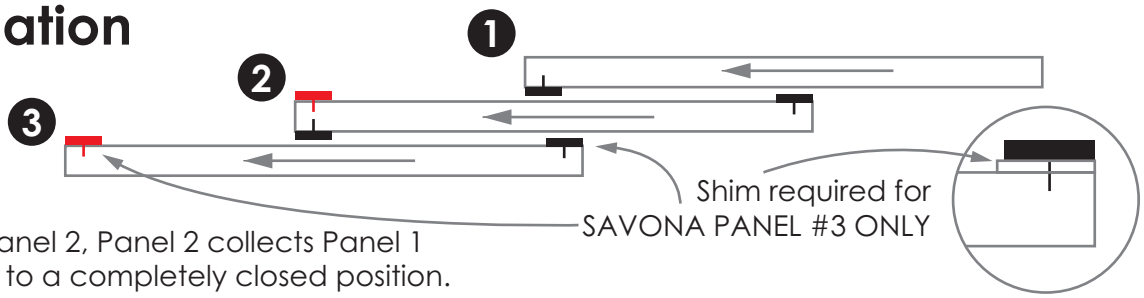

Panel 3 collects Panel 2, Panel 2 collects Panel 1
and pulls them all to a completely closed position.

Block Orientation MONACO

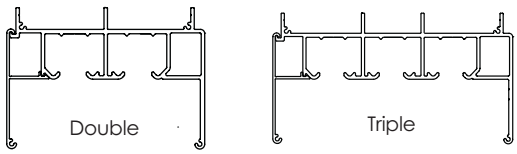

T LINE

MODERNO 58

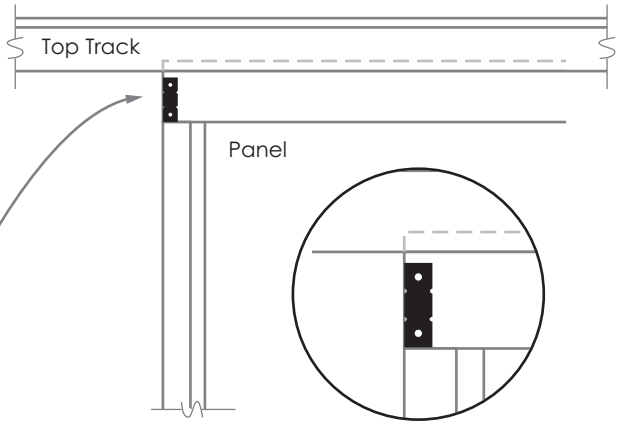

LONG EDGE of Block
Flush with end of Rail
@ Bottom of Rail

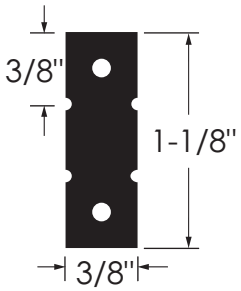

SYSTEM 214

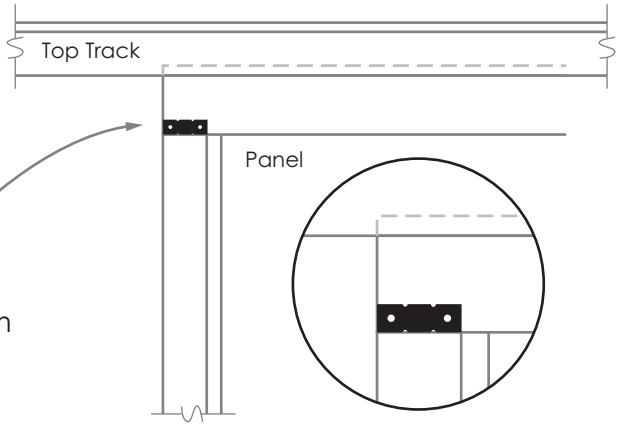

SHORT EDGE of Block
Flush with end of Rail
LONG EDGE @ Bottom
of Rail

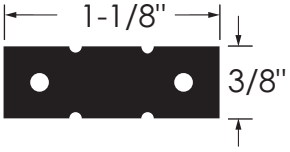

Block Orientation SAVONA

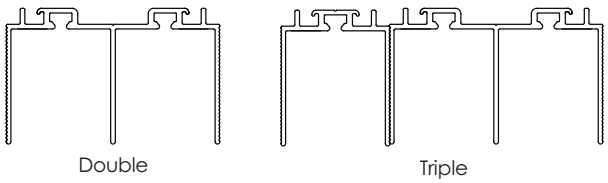

T LINE

MODERNO 58

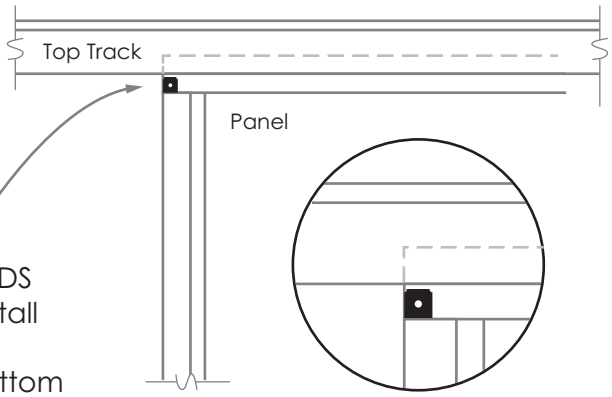

BREAK OFF BLOCK ENDS
to 3/8" x 3/8" then install
Flush with end of Rail
Bottom of Block @ bottom
of Rail... SHIM PANEL 3 ONLY

BREAK OFF at notches
to yield 2 Collector blocks
(discard middle section)

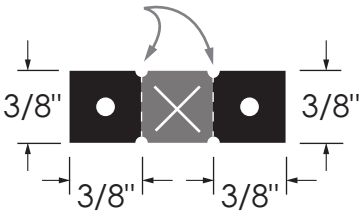

SYSTEM 214

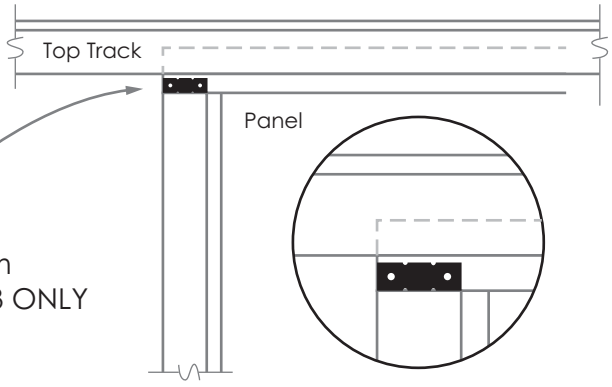

SHORT EDGE of Block
Flush with end of Rail
LONG EDGE @ Bottom
of Rail... SHIM PANEL 3 ONLY

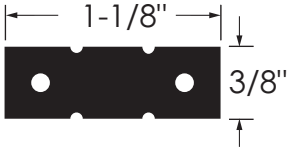

Riviera
rivieraglassdividers.com

WARRANTY

Riviera Glass Dividers are warranted to be free of defects in material and workmanship for a period of one year. Product reported as defective are subject to inspection and validation by an authorized representative. Alliance Glass Doors Inc. will repair, replace or refund the original cost of the parts, at its option. Remedies do not include glass breakage (by any cause), labour, installation costs, finishing costs, indirect or consequential damages.