D2D-CMxMPxMT - Vertical Mount - Mitred Panels - Mitred Tracks

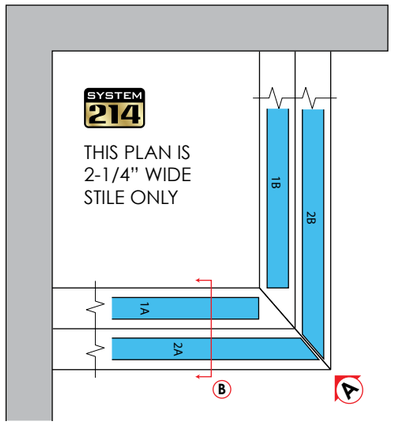

ELEVATION A

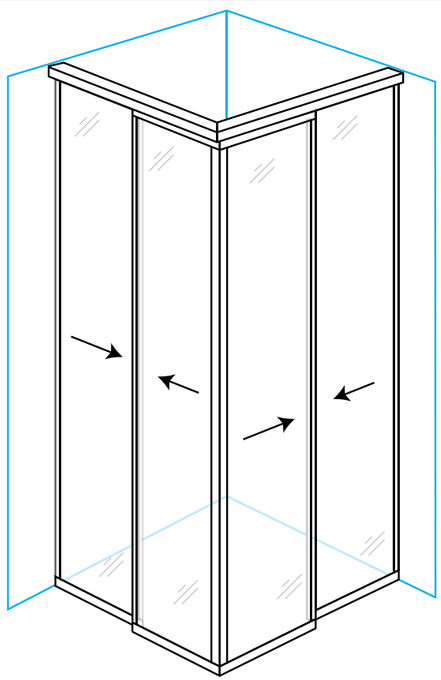

SEE INSTALLATION INSTRUCTIONS FOR CORNER DETAILS

PROJECT:

ARCHITECT:

Riviera
rivieraglassdividers.com

ALLIANCE GLASS DOORS INC.
Surrey, BC, Canada, V3W 1A2
T: 604.501.2588
F: 604.501.1608

SECTION B

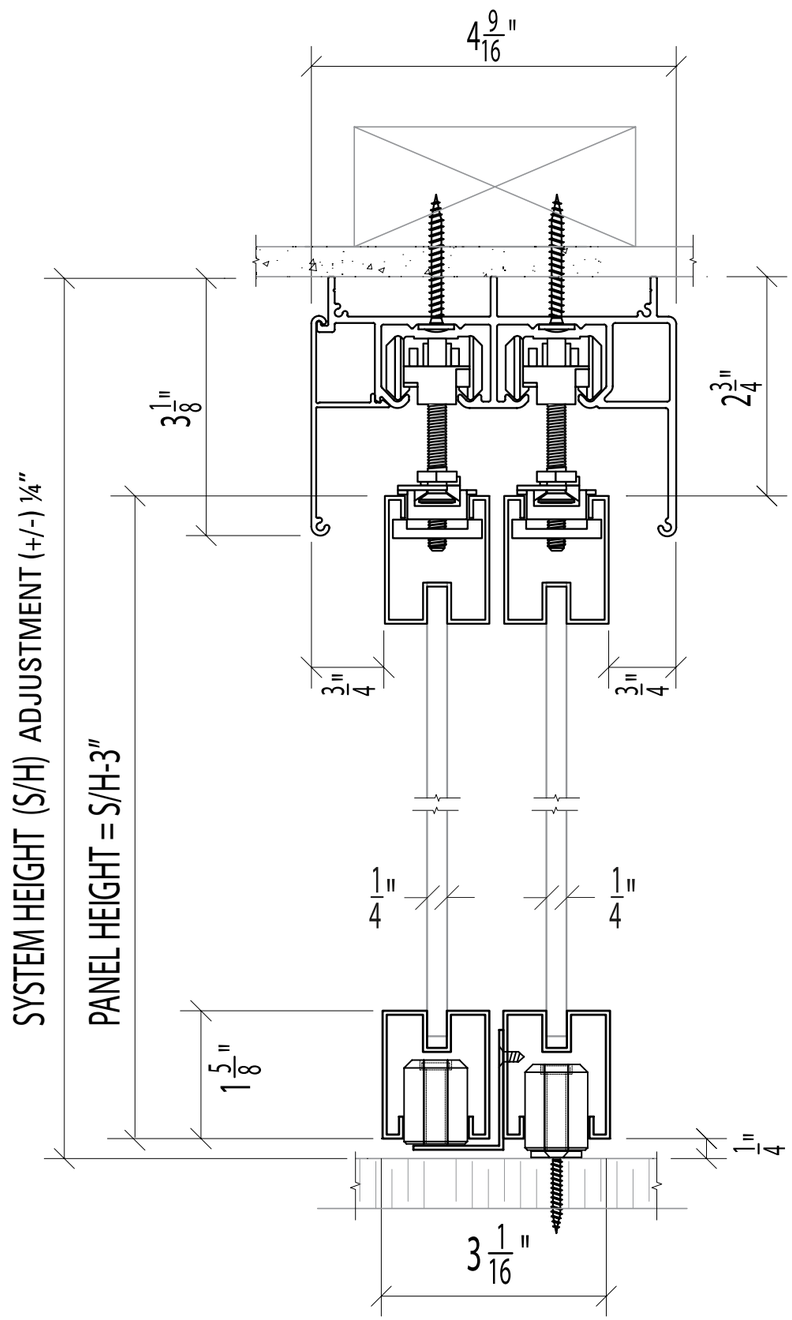

MONACO Mx-DCP* with Mx-DCP at 90˚

Double Track - Vertical Mount - Floor Post with Carrier Post to Double Track - Vertical Mount - Floor Post with Carrier Post

SHEET:

JOB #:

SYSTEM PARTS

CUSHION CAPTURE ROLLER ASSEMBLY
(SHOWN WITH SINGLE TOP TRACK)

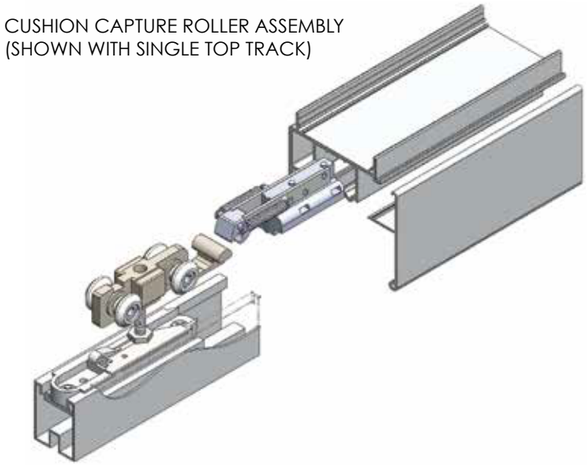

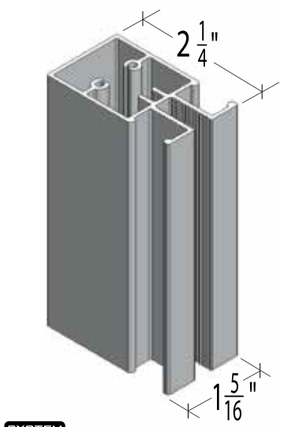

SYSTEM 214 2-1/4" WIDE STILE ONLY

* FLOOR POST

CARRIER POST

STANDARD INSERTS

- ❒ DIFFUSED WHITE LAMI GLASS
- ❒ CLEAR LAMINATED GLASS
- ❒ MIRROR
- ❒ PREFINISHED HARDBOARD
- ❒ MIRROR / HARDBOARD

OPTIONAL PARTS

❒

BLACK ANODIZED FINISH

❒

SINGLE TRACK END CAP

❒

SYSTEM 214 LOCK

❒

SYSTEM 214 EDGE PULL

SPECIAL INSERTS

- ❒ POLAR WHITE GLASS
- ❒ BLACK GLASS
- ❒ CUSTOMER SUPPLIED INSERT
- ❒ DIVISION BARS

DRAWN BY: JL

DATE: 11/08/20

CHECKED BY: DL

PLEASE NOTE: "x" in the product code refers to the stile options - Standard T LINE = "T" ; SYSTEM 214 = "214" MODERNO = "M58"