Riviera
rivieraglassdividers.com

SAVONA Installation Instructions

Header, Ceiling, Soffit Mount

VERTICALLY FASTENED TOP TRACK - PLAN 9

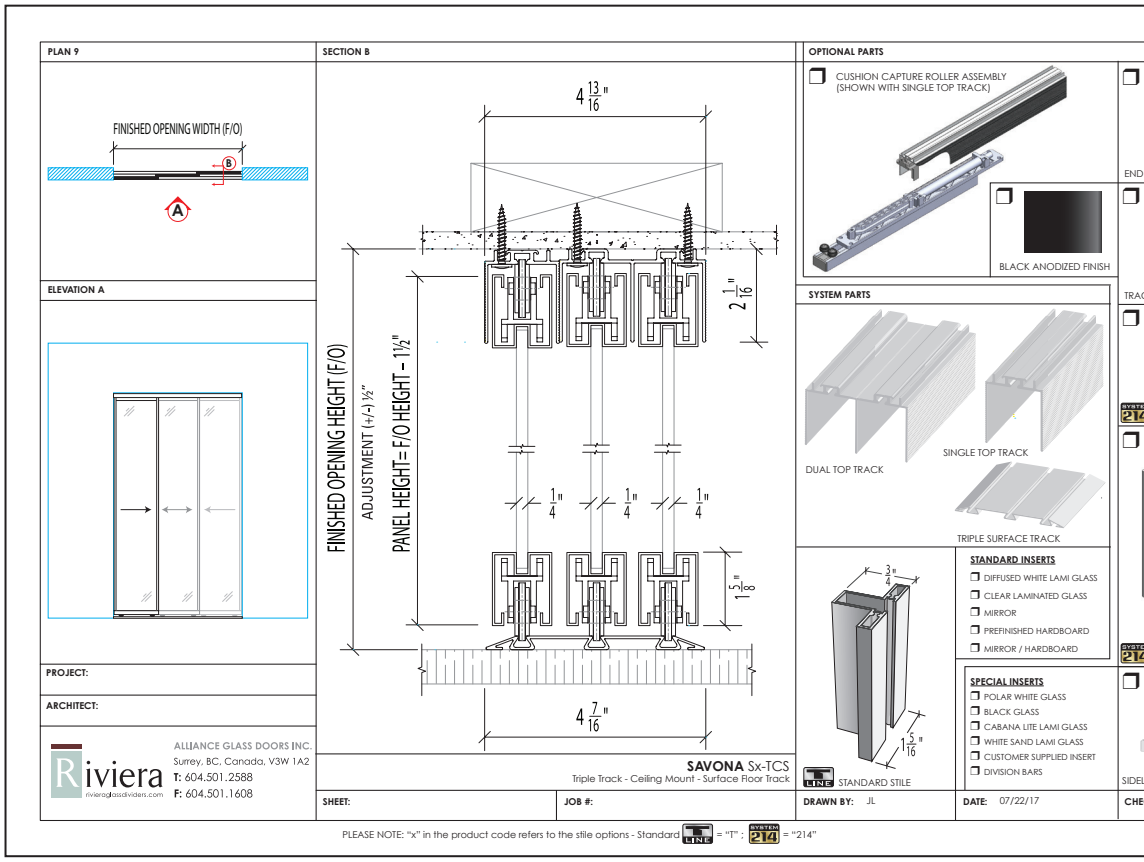

Savona - System Components

1 - Top Track
2 - Track End Cap
3 - Panel Locator Ramp
4 - Wall Clip
5 - Spring Top Roller / Rail Cap
6 - Screw Adjustable Bottom Roller / Rail Cap
7 - Bottom Track - Flush
8 - Bottom Track - Surface

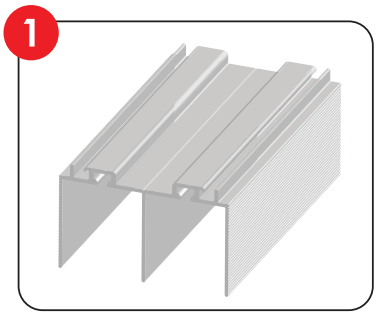

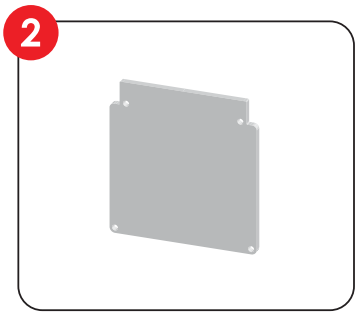

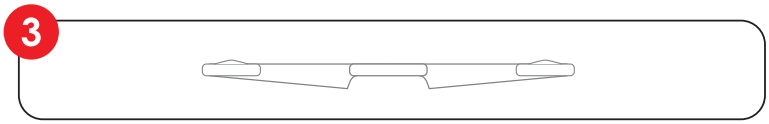

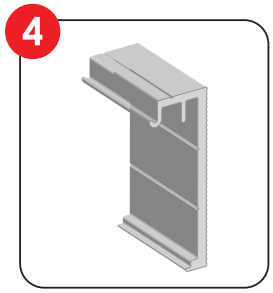

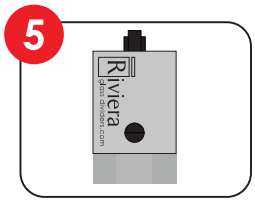

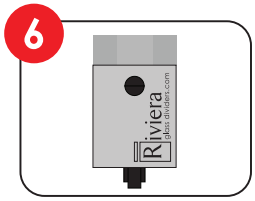

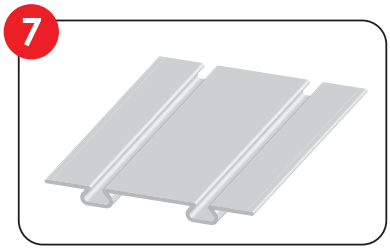

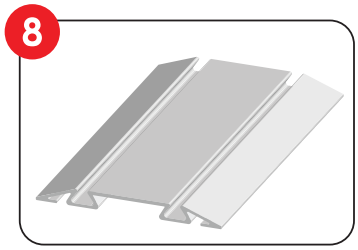

General

A - "T" Stile
B - System 214 Wide 2 1/4" Stile **
C - Sidelite Shoe
D - System 214 Lock
E - System 214 Edge Pull

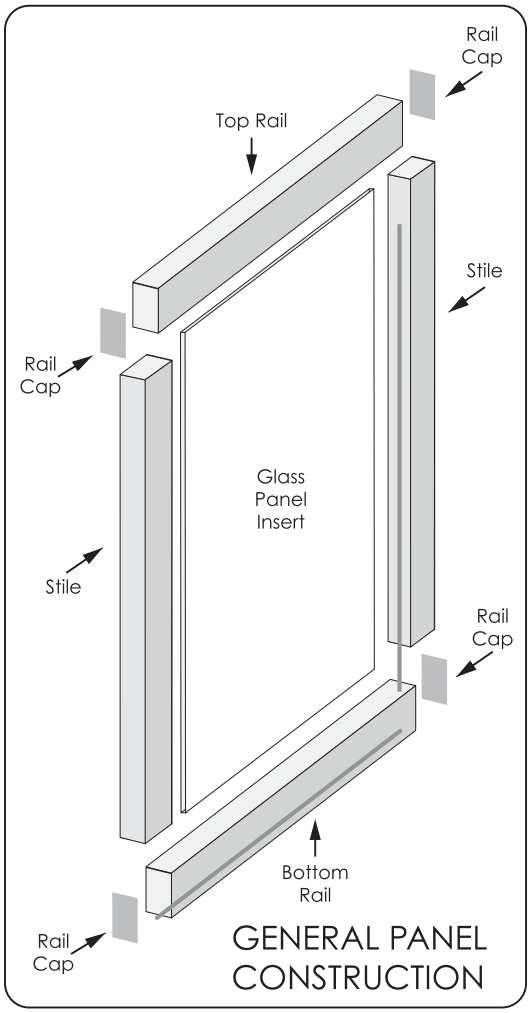

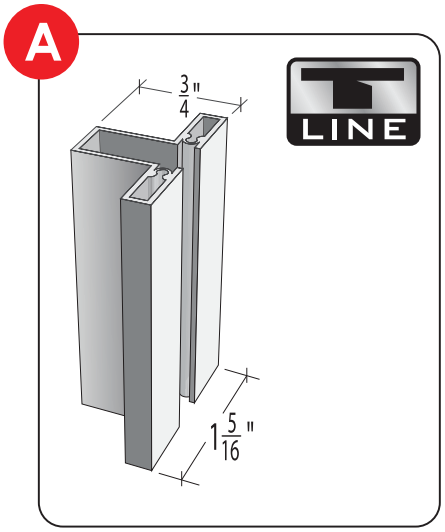

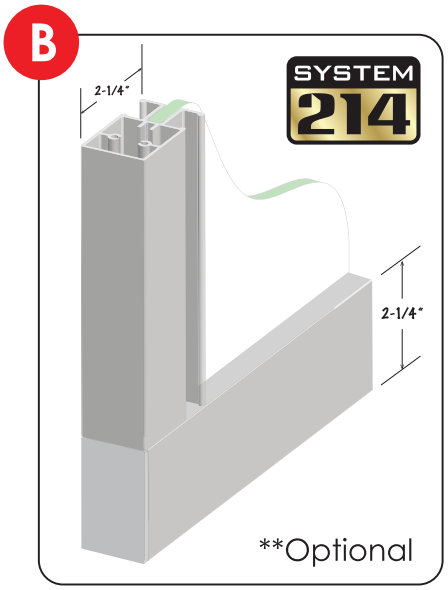

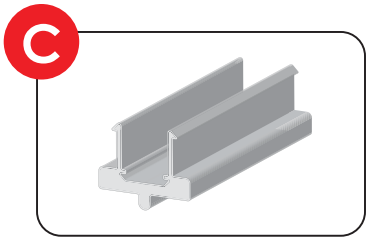

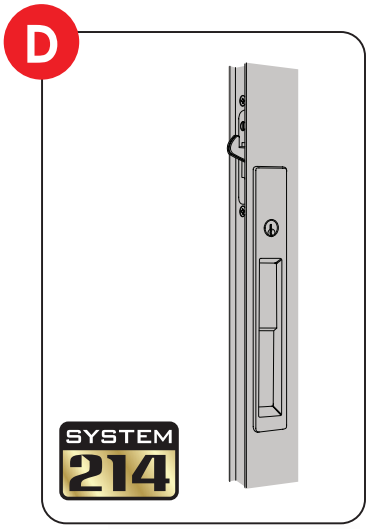

Riviera
rivieraglassdividers.com
T: 604.501.2588
F: 604.501.1608

SAVONA Installation Instructions

Header, Ceiling, Soffit Mount

VERTICALLY FASTENED TOP TRACK - PLAN 9

IMPORTANT: Read these instructions completely before beginning any installation. Once the product is at the opening site and tools and parts are set up and ready to go, each panel should be able to be installed in 20 - 30 minutes.

A Install Top Track

1. Measure track and trim top track to length as required.
2. Mark drill locations to the side of the top roller grooves spaced at approximately 24" centres alternating down the track length and at each track end point. Drill holes to match screws provided. Screws **MUST** be located into solid backing.
3. **IMPORTANT: DON'T POSITION SCREW IN ROLLER GROOVE**
4. Position track across wall thickness keeping in mind the desired backset of fascia. Fasten track vertically to header, soffit or ceiling.

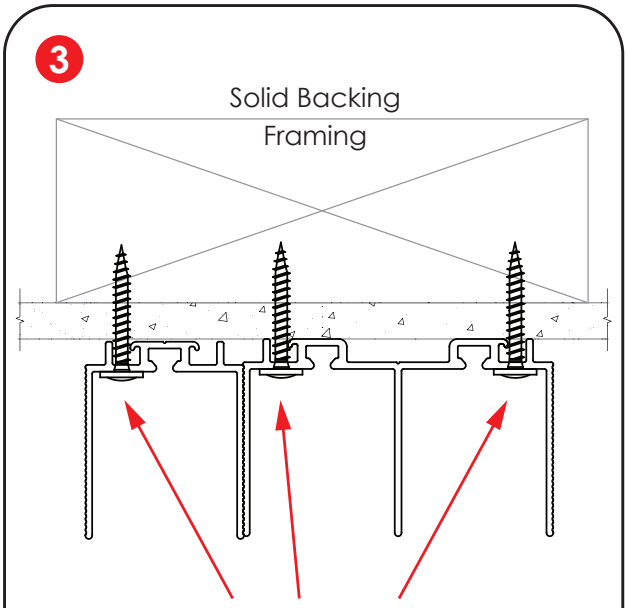

Screw Locations
Not In Roller Groove
Triple Track Ceiling Mount Shown

Determine if you have SURFACE floor track or FLUSH floor track.

B SURFACE Floor Track

Savona Floor Tracks are designed for concealed fastening. It is **NOT** recommended that they be drilled and screwed down. For a cleaner look follow these instructions:

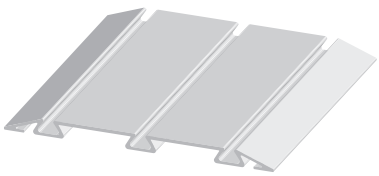

TRIPLE SURFACE TRACK

5. Measure track and trim bottom track to length as required.
6. Top and bottom tracks are NOT the same width, therefore use the following method for proper vertical alignment. Using plumb-bob trial position track in place by aligning top and bottom track **roller grooves**. Lightly mark the outside edges at each end of floor track on floor with pencil.
7. Apply two sided carpet full length on the track underside on the flat surface that will contact floor. Apply dabs of construction adhesive along the underside of track and position track referencing pencil marks. **Carpet tape will hold track in place while adhesive sets.**

B FLUSH Floor Track

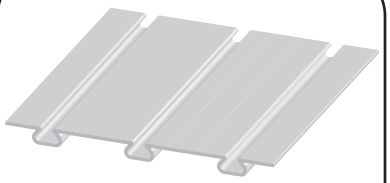

TRIPLE BOTTOM TRACK

Savona Floor Tracks are designed for concealed fastening. It is **NOT** recommended that they be drilled and screwed down. For a cleaner look follow these instructions:

5. Shim subfloor to 5/16" below finished floor surface.
6. Measure track and trim to length as required.
7. Using plumb-bob trial position track in place by aligning top and bottom track roller grooves. Mark the edges at each end of floor track on shim.
8. Apply two sided carpet full length on the underside flat surface that will contact shim. Apply dabs of construction adhesive along the underside of track and position track referencing shim marks. **Carpet tape will hold track in place while adhesive sets.**
9. Finish flooring up to track edges.

C Install the Panel

10. Ensure the pre-installed "Spring Rollers" are at the top of the panel.
11. Lift the panel up into the guide channel and engage the top rollers into the top track groove. Set the bottom roller into the corresponding floor track groove.
12. Adjust floor clearance and vertically wall alignment with wall edge by temporarily shimming the panels between the bottom rail and floor track to take the weight off the bottom rollers. Access the vertical adjustment bolt through the port in each bottom rail cap using a #3 Philips screwdriver.
MANUAL TOOLS SHOULD BE USED FOR THIS PROCESS.

SPECIAL NOTE: To achieve a panel positioning along the track push panel locator ramps into the top roller groove and position such that the top roller comes to rest in the centre of the ramp. Secure in place with a dab of silicone.

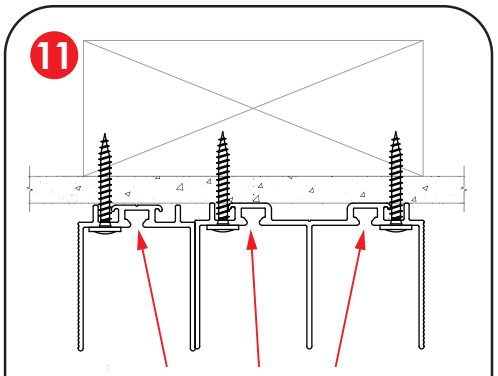

Panel Locator Ramps
Go in Roller Groove
Triple Track Ceiling Mount Shown

WARRANTY

Riviera Glass Dividers are warranted to be free of defects in material and workmanship for a period of one year. Product reported as defective is subject to inspection and validation by an authorized representative. Alliance Glass Doors Inc. will repair, replace or refund the original cost of the doors or parts, at it's option. Remedies do not include glass breakage by any cause, labour, installation costs, finishing costs, indirect or consequential damages.