PLAN 2

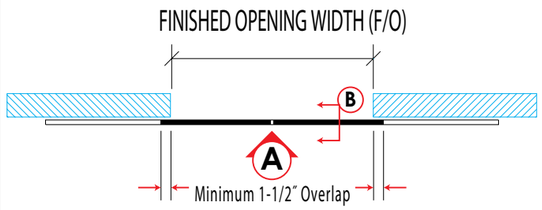

ELEVATION A

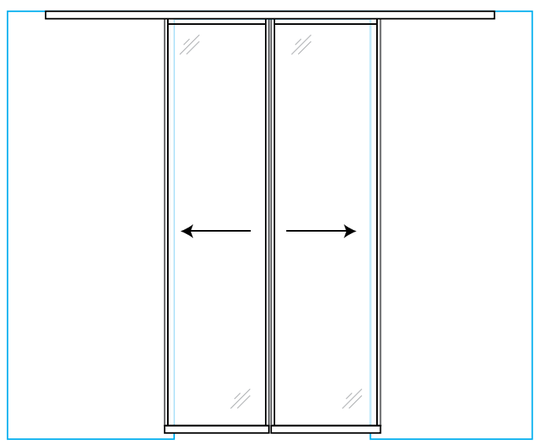

SECTION B

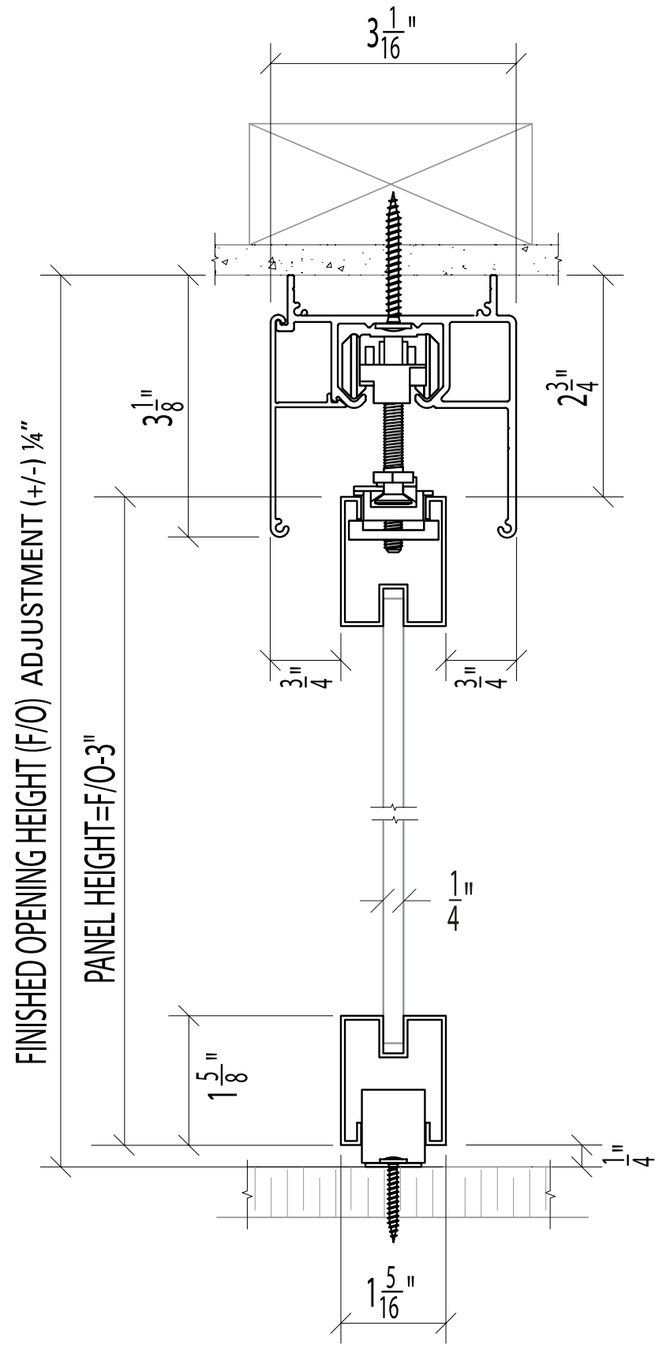

MONACO Mx-SCP*
Single Track - Ceiling Mount - Floor Post

SYSTEM PARTS

CUSHION CAPTURE ROLLER ASSEMBLY
(SHOWN WITH SINGLE TOP TRACK)

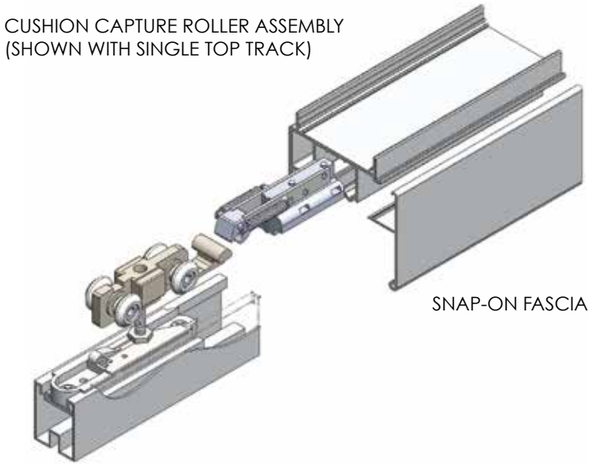

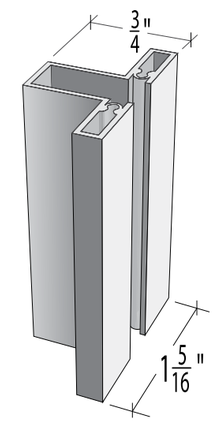

T-STILE

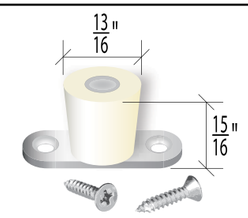

* FLOOR POST

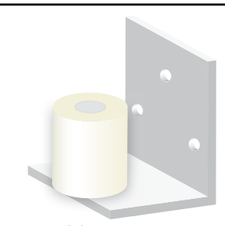

CARRIER POST

OPTIONAL PARTS

❒

BLACK ANODIZED FINISH

❒

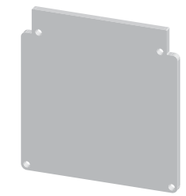

SINGLE TRACK END CAP

❒

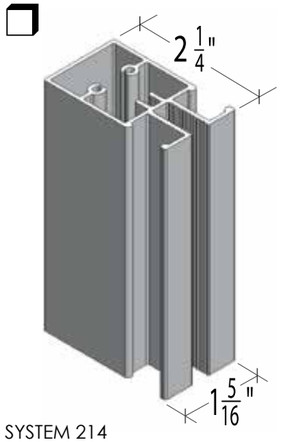

SYSTEM 214
2-1/4" WIDE STILE

❒

SYSTEM
214 LOCK

❒

SYSTEM
214 EDGE PULL

STANDARD INSERTS

- ❒ DIFFUSED WHITE LAMI GLASS
- ❒ CLEAR LAMINATED GLASS
- ❒ MIRROR
- ❒ PREFINISHED HARDBOARD
- ❒ MIRROR / HARDBOARD

SPECIAL INSERTS

- ❒ POLAR WHITE GLASS
- ❒ BLACK GLASS
- ❒ CABANA LITE LAMI GLASS
- ❒ WHITE SAND LAMI GLASS
- ❒ CUSTOMER SUPPLIED INSERT
- ❒ DIVISION BARS

PROJECT:

ARCHITECT:

Riviera by Alliance Glass Doors

ALLIANCE GLASS DOORS INC.
Surrey, BC, Canada, V3W 1A2
T: 604.501.2588
F: 604.501.1608
www.rivieraglassdividers.com

SHEET:

JOB #:

DRAWN BY: JL

DATE: 04/07/2016

CHECKED BY: DL

PLEASE NOTE: "x" in the product code refers to the stile options - Standard = "T" ; Sys 214 = "W"