Riviera
rivieraglassdividers.com

PORTOFINO Installation Instructions

Header Mount

POCKET DOOR - PLAN 3

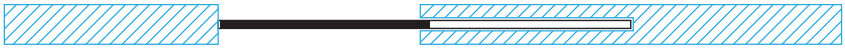

PLAN 3

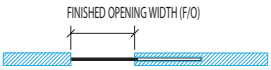

ELEVATION A

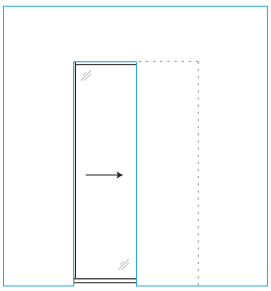

SECTION B

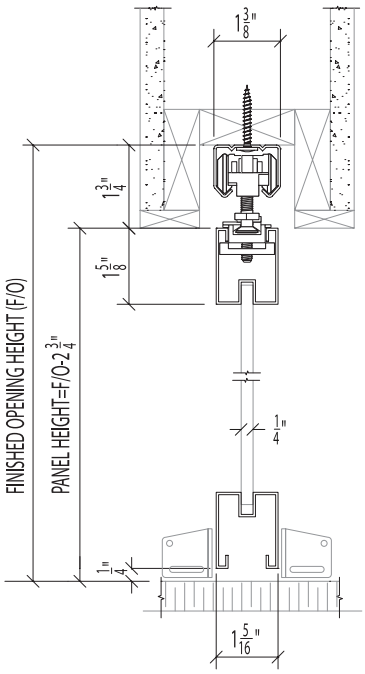

SYSTEM PARTS

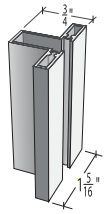

T-STILE

TOP TRACK

2 X

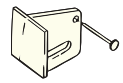

POCKET JAMB GUIDES

STANDARD INSERTS

- ❒ DIFFUSED WHITE LAMI GLASS
- ❒ CLEAR LAMINATED GLASS
- ❒ MIRROR
- ❒ PREFINISHED HARDBOARD
- ❒ MIRROR / HARDBOARD

❒ CUSHION CAPTURE ROLLER ASSEMBLY (SHOWN WITH SINGLE TOP TRACK)

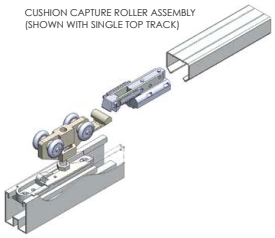

OPTIONAL PARTS

❒

BLACK ANODIZED FINISH

❒

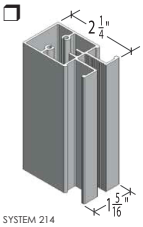

SYSTEM 214
2-1/4" WIDE STILE

SPECIAL INSERTS

- ❒ POLAR WHITE GLASS
- ❒ BLACK GLASS
- ❒ CABANA LITE LAMI GLASS
- ❒ WHITE SAND LAMI GLASS
- ❒ CUSTOMER SUPPLIED INSERT
- ❒ DIVISION BARS

❒

SYSTEM
214 LOCK

❒

SYSTEM
214 EDGE PULL

PROJECT:

ARCHITECT:

Riviera
rivieraglassdividers.com
ALLIANCE GLASS DOORS INC.
Surrey, BC, Canada, V3W 1A2
T: 604.501.2588
F: 604.501.1608

PORTOFINO Px-SCG
Single Track - Ceiling Mount - Floor Guides

SHEET:	JOB #:	DRAWN BY: JL	DATE: 04/07/2016	CHECKED BY: DL

PLEASE NOTE: "x" in the product code refers to the stile options - Standard = "T" ; Sys 214 = "W"

Portofino - System Components

1 - Top Track
2 - Cushion Capture
3 - Roller
4 - Adjusting Bolt
5 - Hanger Lock
6 - Door Guide

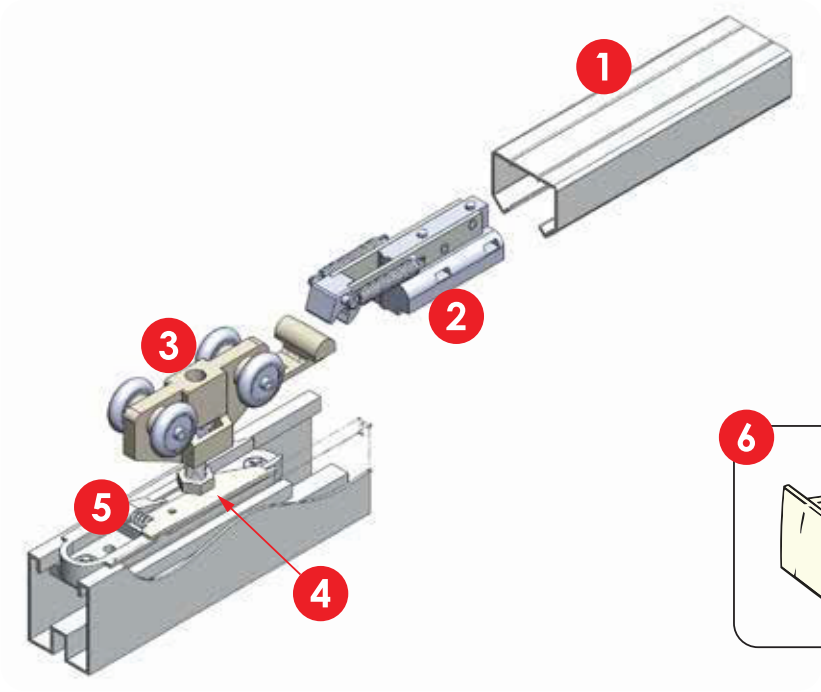

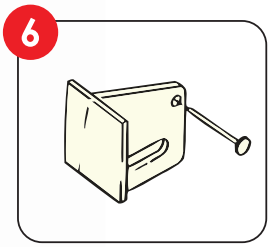

General

A - "T" Stile
B - System 214 Wide 2 1/4" Stile **
C - Sidelite Shoe
D - System 214 Lock
E - System 214 Edge Pull

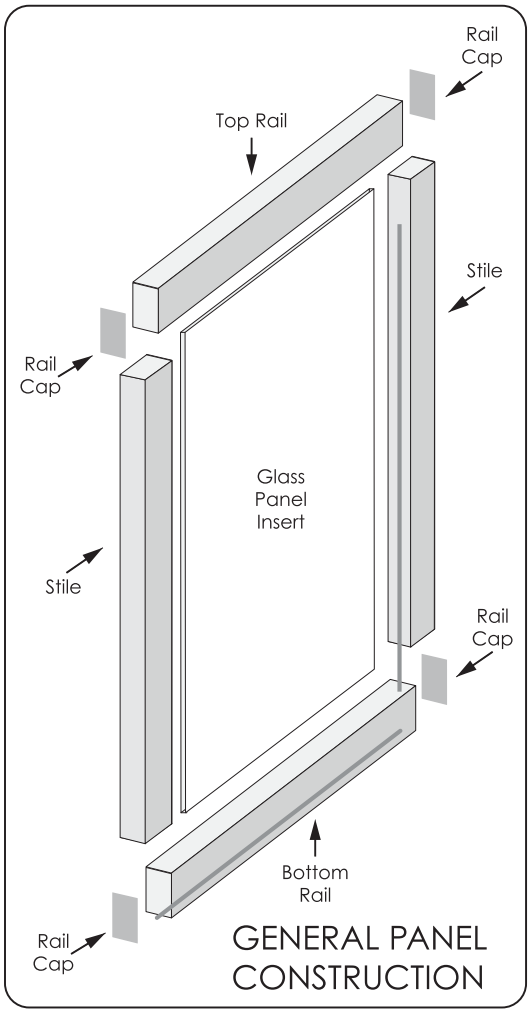

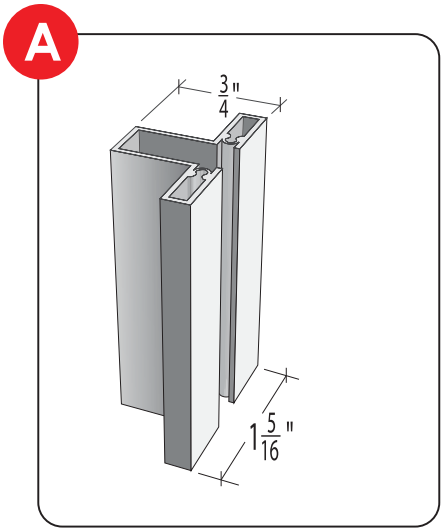

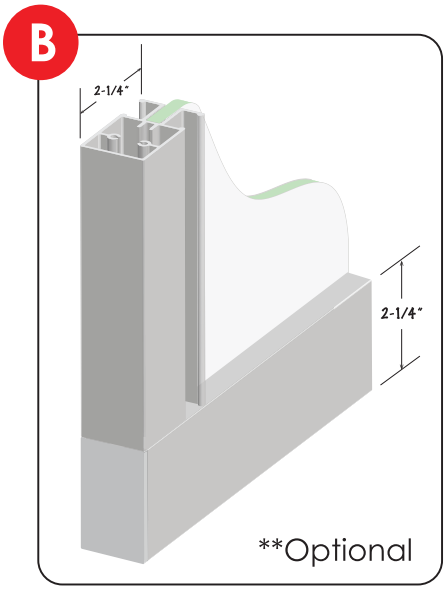

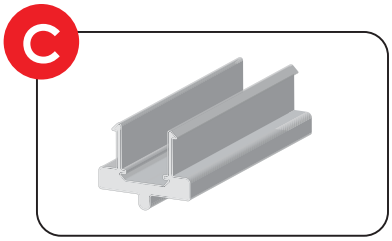

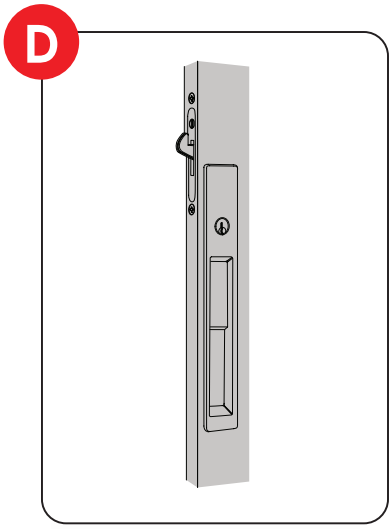

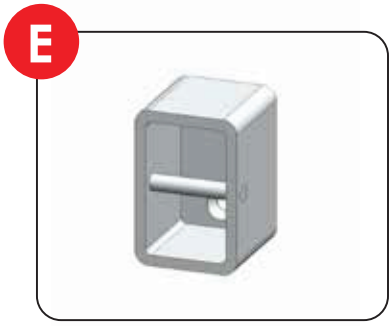

Riviera
rivieraglassdividers.com
T: 604.501.2588
F: 604.501.1608

PORTOFINO Installation Instructions

Header Mount
POCKET DOOR - PLAN 3

IMPORTANT: Read these instructions completely before beginning any installation. Once the product is at the opening site and tools and parts are set up and ready to go, each panel should be able to be installed in 20 - 30 minutes.

A Installation Using RIVIERA Supplied Top Track

Install Top Track and Roller assembly in Pocket Cage PRIOR to installing Pocket Frame in the wall:

1. Measure track and using a power miter box (chop saw) trim both top track to length as required to fit pocket Door cage.
2. Install (1) Cushion Capture at "closed" end and (2) Rollers into track. Insure the roller bumper faces the Cushion Capture hook.
3. Mounting screws **MUST** be located into pocket door frame header and spaced at approximately 24" centres including a fastener at each end of the track. Mark drill locations on the drill lines between each top roller track if not pre-drilled, **drill and countersink** holes to match screws provided.
4. Position track across centred on frame width. Fasten track vertically to frame header.
5. Install Pocket frame in the opening.

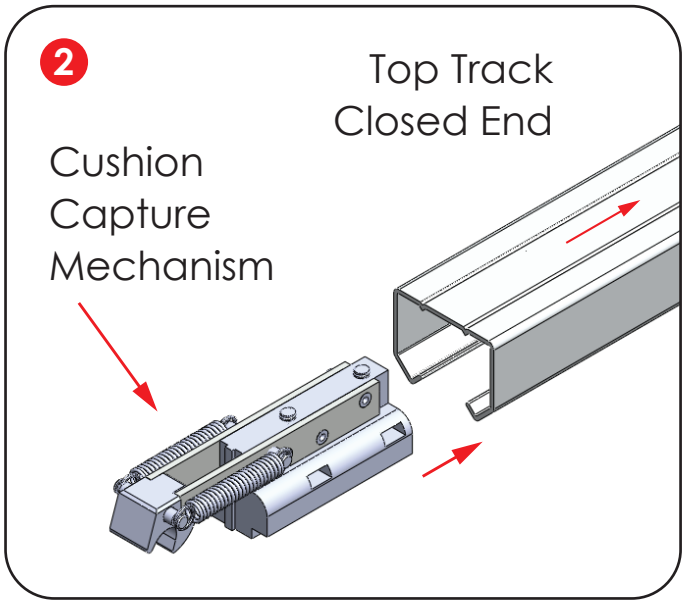

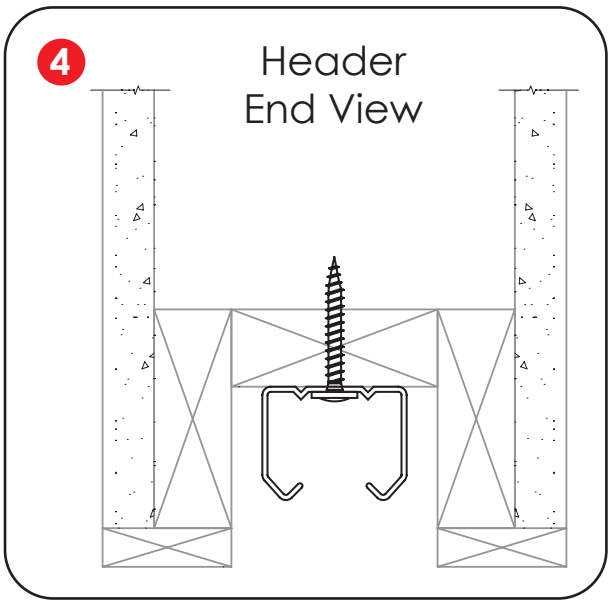

A Installation Using RIVIERA Supplied Top Track cont.

6 Lift the panel(s) up and engage each roller adjusting bolt head into its hanger lock by pushing bolt against spring lock until it latches. Adjust roller bolt vertically using the combination wrench/screwdriver tool provided, to adjust floor clearance and vertically align panels with wall edge. Panel stopping location can be fine tuned by loosening the two screws in the cushion capture mechanism and moving to desired position along the track.

7 Install 2 piece door guide by nailing each guide to each jamb at the bottom of the frame snug with bottom door rail.

8 Trim out the rest of the opening stops as usual

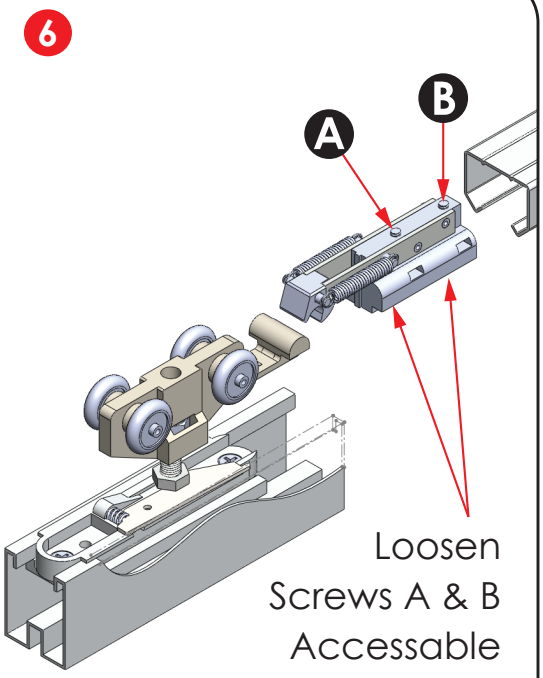

B Installation Using Pocket Frame Manufacturer's Supplied Top Track

9 Carefully remove stop trim and de-install existing door(s). You will utilize the existing track in this installation. Save the track, rollers and panel hanger brackets from the existing system. ***Be sure to order your Portofino panels with "wooden hanger blocks" installed.*** Cushion Capture is not available in this application.

10 Install existing panel hanger brackets in the wooden hanger blocks in the top rail of the Portofino panel. Lift the panel(s) up and engage each roller adjusting bolt head into its hanger bracket. Adjust roller bolt vertically to adjust floor clearance and vertically align panels with wall edge then lock in place. Install 2 piece door guide by nailing each guide to each jamb at the bottom of the frame snug with bottom door rail.
Re-trim the opening stops as previous.

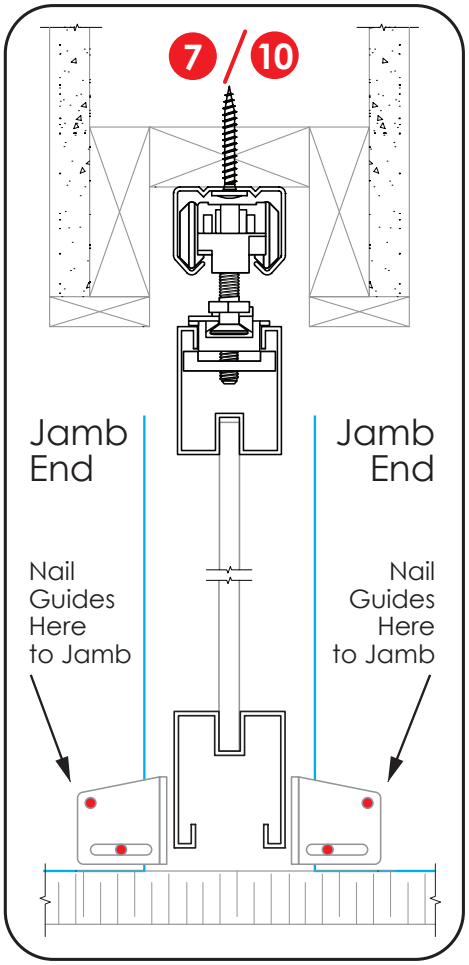

WARRANTY

Riviera Glass Dividers are warranted to be free of defects in material and workmanship for a period of one year. Product reported as defective is subject to inspection and validation by an authorized representative. Alliance Glass Doors Inc. will repair, replace or refund the original cost of the doors or parts, at it's option. Remedies do not include glass breakage by any cause, labour, installation costs, finishing costs, indirect or consequential damages.