Riviera
rivieraglassdividers.com

MONACO Installation Instructions

Header, Ceiling, Soffit Mount with Stationary Panel

VERTICALLY FASTENED TOP TRACK - PLAN 5F

PLAN 5F

ELEVATION A

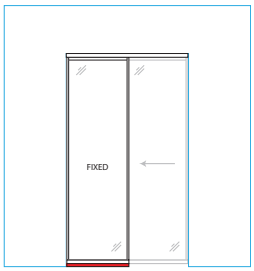

SECTION B

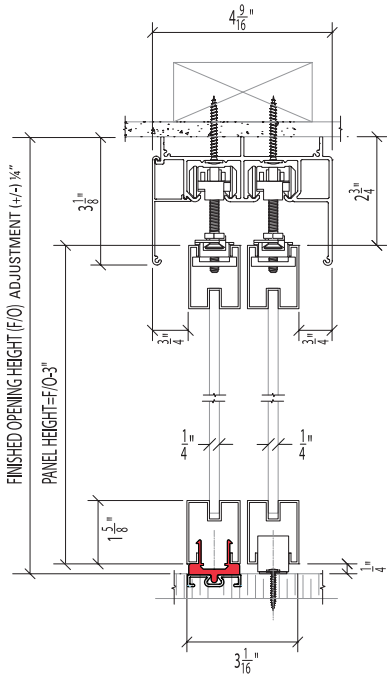

MONACO Mx-DCP*
Double Track - Ceiling Mount - Floor Post

SYSTEM PARTS

CUSHION CAPTURE ROLLER ASSEMBLY (SHOWN WITH SINGLE TOP TRACK)

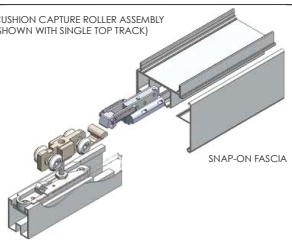

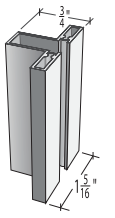

T-STILE

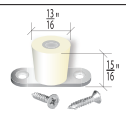

* FLOOR POST

CARRIER POST

STANDARD INSERTS

- ❒ DIFFUSED WHITE LAMI GLASS
- ❒ CLEAR LAMINATED GLASS
- ❒ MIRROR
- ❒ PREFINISHED HARDBOARD
- ❒ MIRROR / HARDBOARD

OPTIONAL PARTS

❒

BLACK ANODIZED FINISH

❒

DOUBLE TRACK END CAP

❒

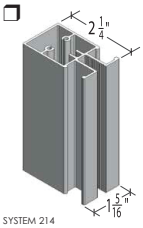

SYSTEM 214
2-1/4" WIDE STILE

❒

SYSTEM
214 LOCK

❒

SYSTEM
214 EDGE PULL

SPECIAL INSERTS

- ❒ POLAR WHITE GLASS
- ❒ BLACK GLASS
- ❒ CABANA LITE LAMI GLASS
- ❒ WHITE SAND LAMI GLASS
- ❒ CUSTOMER SUPPLIED INSERT
- ❒ DIVISION BARS

PROJECT:

ARCHITECT:

Riviera
rivieraglassdividers.com
ALLIANCE GLASS DOORS INC.
Surrey, BC, Canada, V3W 1A2
T: 604.501.2588
F: 604.501.1608

SHEET: | **JOB #:** | **DRAWN BY:** JL | **DATE:** 04/07/2016 | **CHECKED BY:** DL

PLEASE NOTE: "x" in the product code refers to the stile options - Standard = "T" ; Sys 214 = "W"

Monaco - System Components

1 - Main Track
2 - Snap on Fascia
3 - Track End Cap
4 - Cushion Capture
5 - Roller
6 - Roller Bumper
7 - Adjusting Bolt
8 - Hanger Lock
9 - Rail Cap
10 - Floor Post
11 - Carrier Post

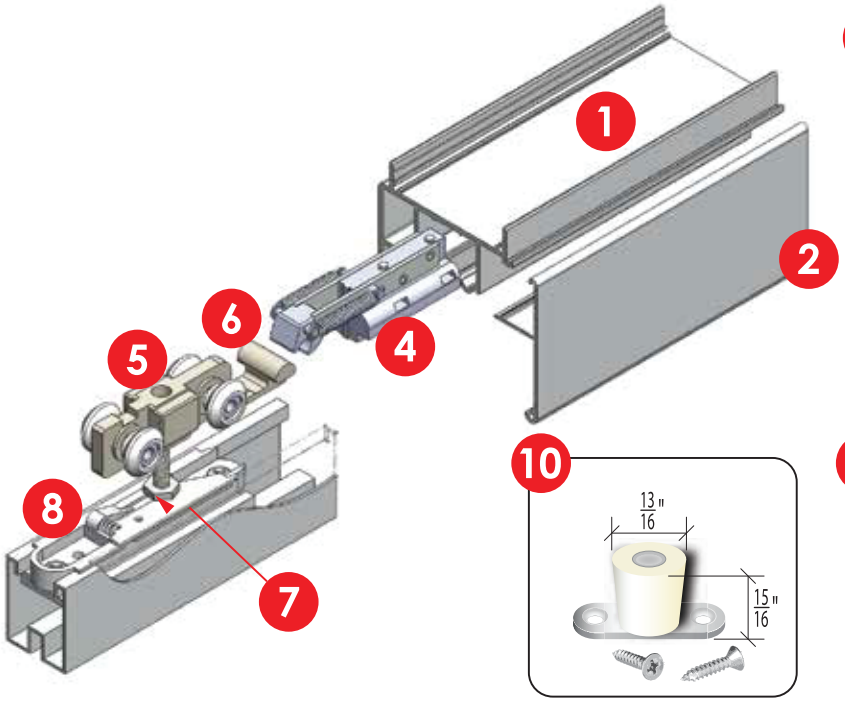

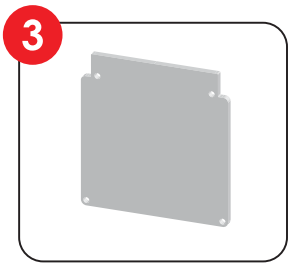

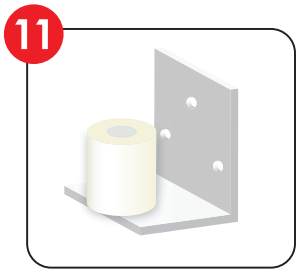

General

A - "T" Stile
B - System 214 Wide 2 1/4" Stile **
C - Sidelite Shoe
D - System 214 Lock
E - System 214 Edge Pull

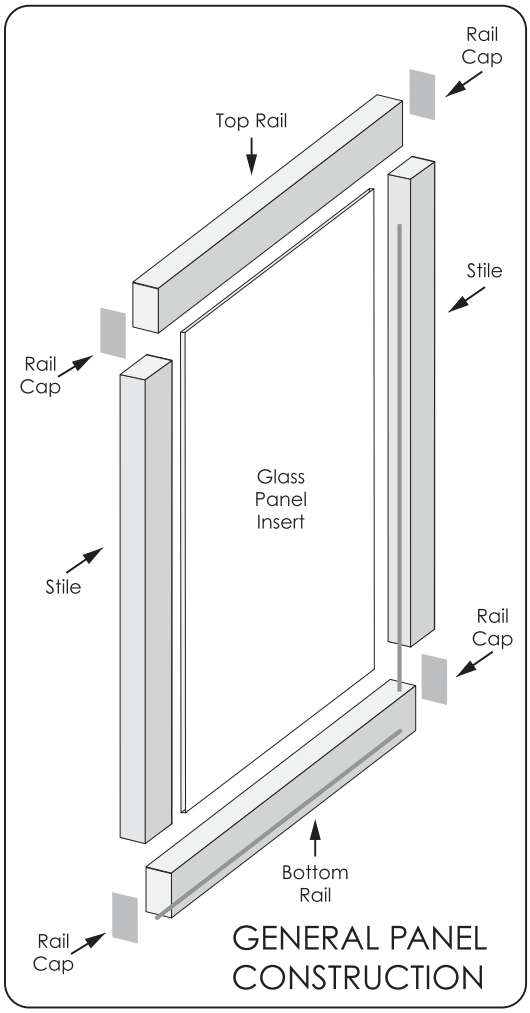

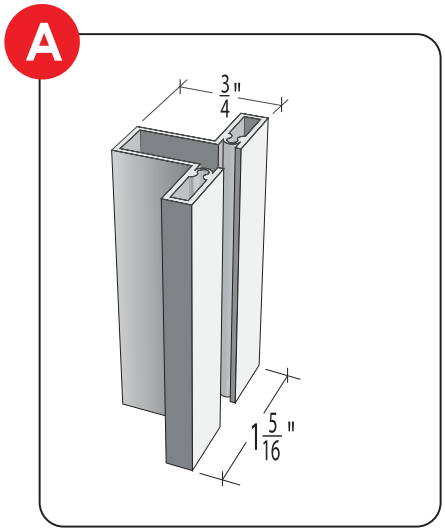

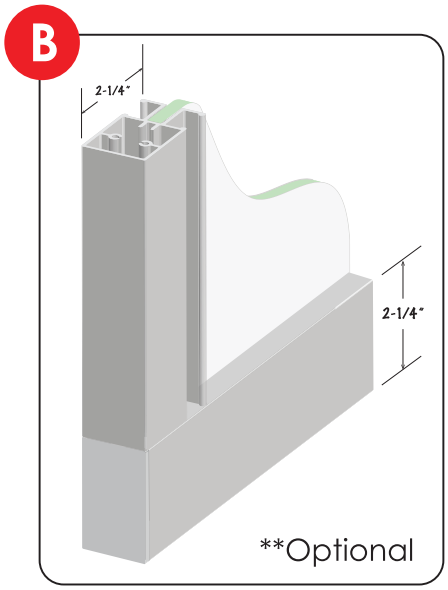

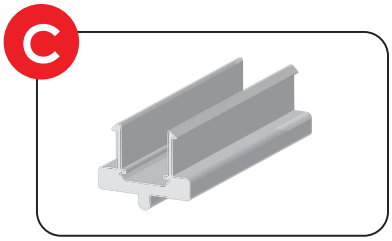

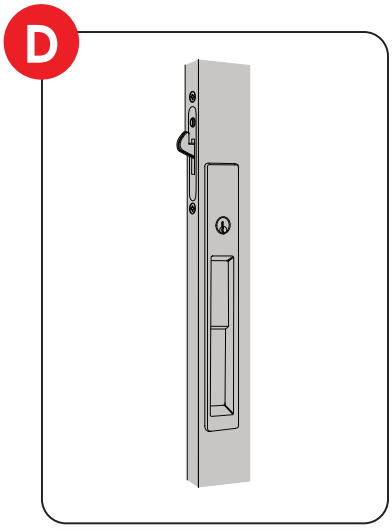

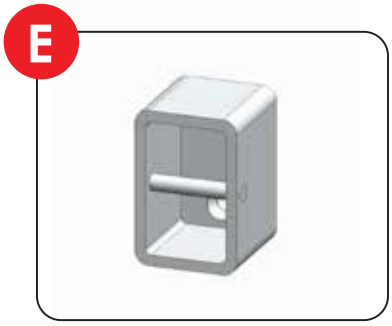

Riviera
rivieraglassdividers.com
T: 604.501.2588
F: 604.501.1608

MONACO Installation Instructions

Header, Ceiling, Soffit Mount
VERTICALLY FASTENED TOP TRACK - PLAN 5

IMPORTANT: Read these instructions completely before beginning any installation. Once the product is at the opening site and tools and parts are set up and ready to go, each panel should be able to be installed in 20 - 30 minutes.

A Install Top Track Main Portion

1. Measure track and using a power miter box (chop saw) trim both main track and fascia to length as required.
2. Mounting screws **MUST** be located into solid backing and spaced at approximately 24" - 32" centres including a fastener at each end of the track. Mark drill locations on the drill line between each top roller track, **drill and countersink** holes to match screws provided.
3. Install Cushion Capture and Rollers into track. Insure the roller bumper faces the Cushion Capture hook.
4. Position track across wall thickness keeping in mind the desired backset of fascia. Fasten track vertically to header, ceiling or soffit.

DON'T INSTALL FASCIA AT THIS TIME

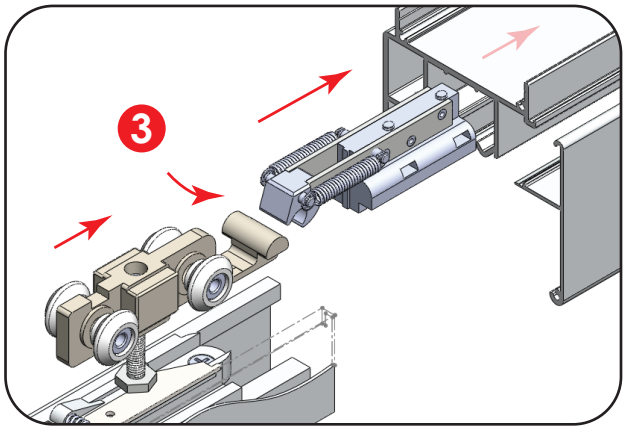

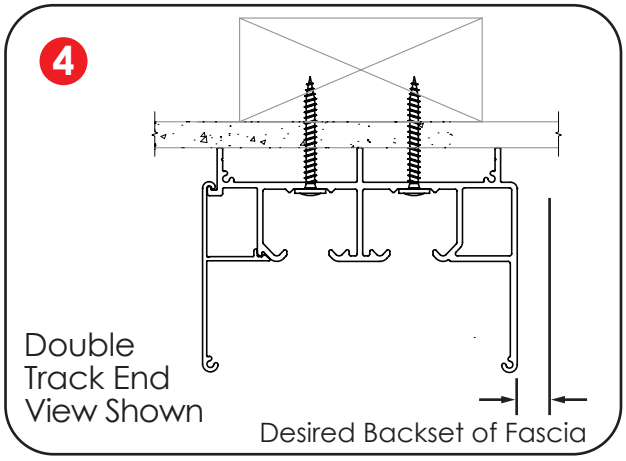

B Install Floor Posts

5. Find the mid point of the opening. Centre posts over centreline and screw each FLOOR POST to the floor, centring vertically under each corresponding top track.

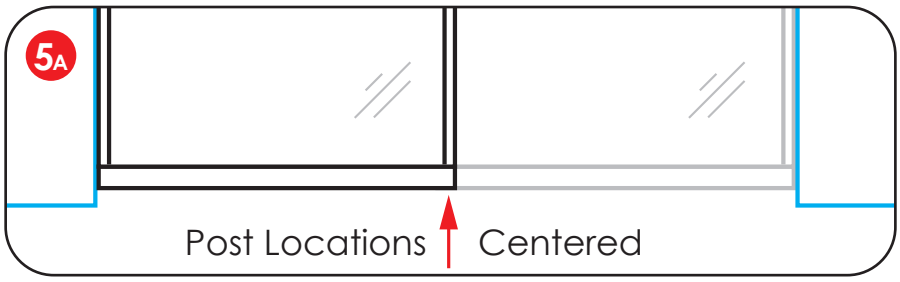

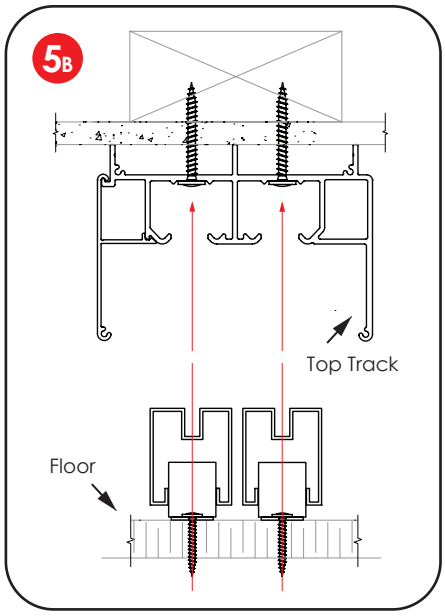

C Install the Panel

6. Ensure the Hanger Locks that are pre-installed in the panel rail are at the top of the panel(s).

   SPECIAL NOTE: To achieve a panel stoping position in line with the end of the Cushion Capture assembly, the Roller Adjusting Bolt should engage the Hanger Lock spring 4 9/16" from the the end of the panel.

7. Set the panel rail over the floor or carrier post(s) at the floor.

8. Lift the panel(s) up and engage each roller adjusting bolt head into its hanger lock by pushing bolt against spring lock until it latches. Adjust roller bolt vertically using the combination wrench/screwdriver tool provided, to adjust floor clearance and vertically align panels with wall edge.

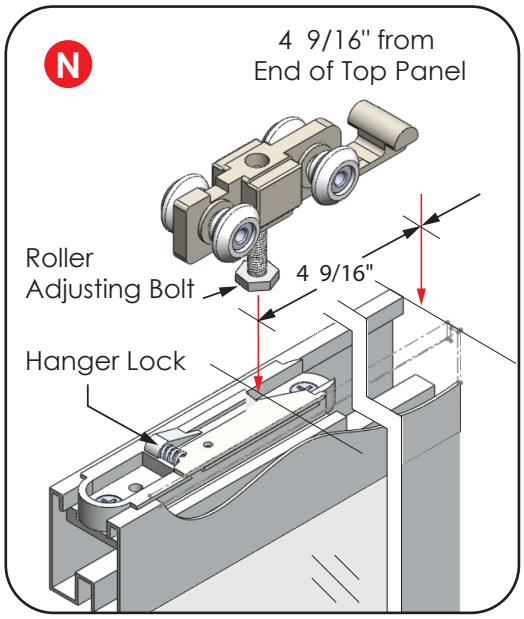

D Panel Adjustment

9. ***Adjust Cushion Capture and Hanger Lock horizontally such that the Bottom Rail Cap never comes in contact with the Floor or Carrier Posts.***

10. Panel stopping location can be fine tuned by loosening the two screws in the cushion capture mechanism and moving to desired position along the track.

11. Further adjustment can be achieved by adjusting the Hanger Lock position in the top rail. Loosen the two clamp screws using an 90 degree angled Philips screwdriver.

12. Hook removable Fascia over main track and snap into place to top track.

13. Install track end caps to exposed track ends with the four #4 - 1/2" screws provided, using the wrench/screwdriver tool provided. (#0-Yellow Robertson drive tip)

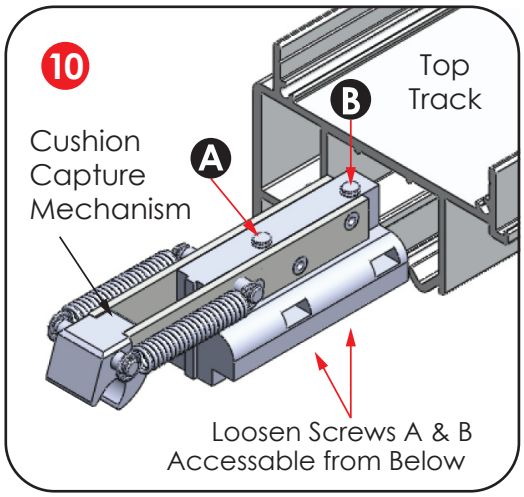

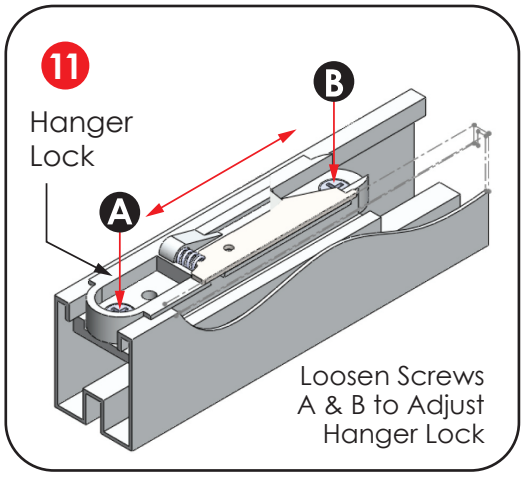

WARRANTY

Riviera Glass Dividers are warranted to be free of defects in material and workmanship for a period of one year. Product reported as defective is subject to inspection and validation by an authorized representative. Alliance Glass Doors Inc. will repair, replace or refund the original cost of the doors or parts, at it's option. Remedies do not include glass breakage by any cause, labour, installation costs, finishing costs, indirect or consequential damages.