Riviera
rivieraglassdividers.com

MONACO Installation Instructions

Wall Slide

HORIZONTALLY FASTENED TOP TRACK - PLAN 4

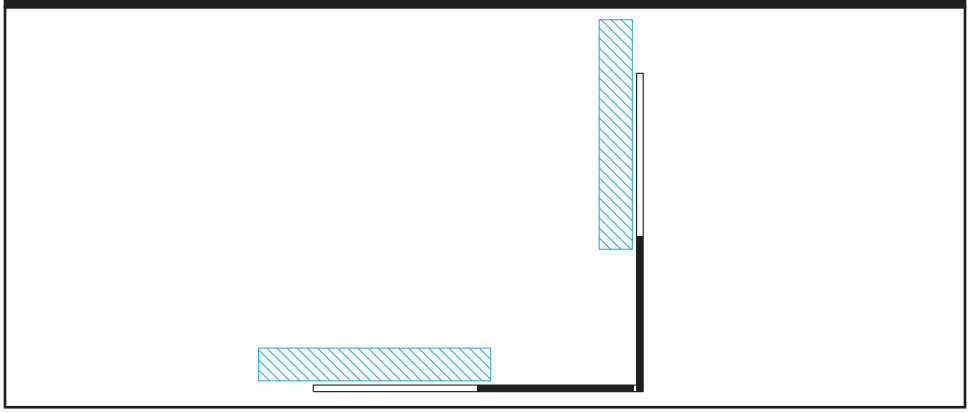

PLAN 4

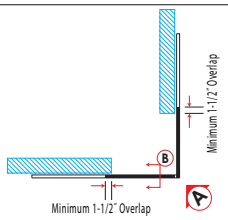

ELEVATION A

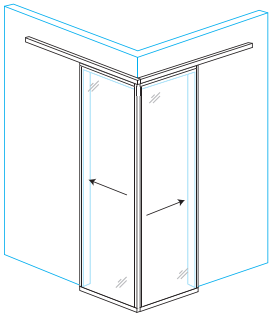

SEE PAGE 2 FOR CORNER DETAILS

PROJECT:

ARCHITECT:

Riviera
rivieraglassdividers.com
ALLIANCE GLASS DOORS INC.
Surrey, BC, Canada, V3W 1A2
T: 604.501.2588
F: 604.501.1608

SECTION B

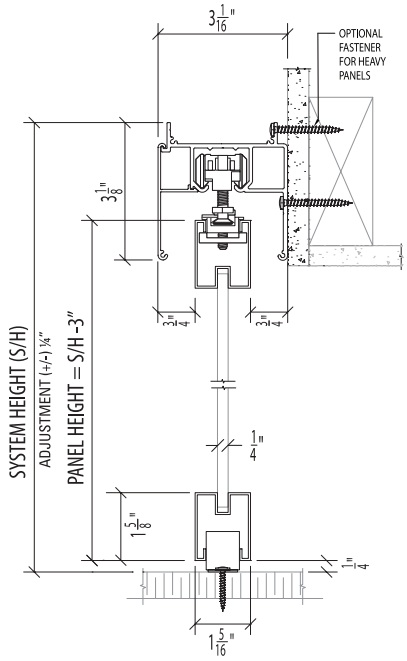

MONACO Mx-SWP* with Mx-SWP* at 90°
Single Track - Wall Mount - Floor Post to Single Track - Wall Mount - Floor Post

SYSTEM PARTS

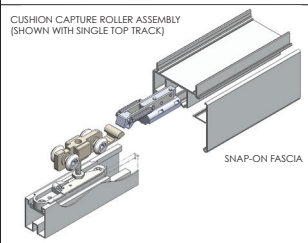

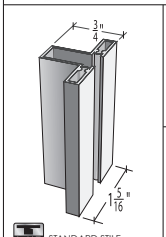

STANDARD STILE

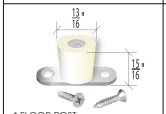

* FLOOR POST

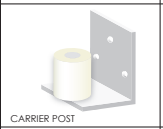

CARRIER POST

STANDARD INSERTS

- ❒ DIFFUSED WHITE LAMI GLASS
- ❒ CLEAR LAMINATED GLASS
- ❒ MIRROR
- ❒ PREFINISHED HARDBOARD
- ❒ MIRROR / HARDBOARD

OPTIONAL PARTS

❒

BLACK ANODIZED FINISH

❒

SINGLE TRACK END CAP

❒

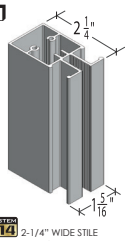

2-1/4" WIDE STILE

❒

LOCK

❒

EDGE PULL

SPECIAL INSERTS

- ❒ POLAR WHITE GLASS
- ❒ BLACK GLASS
- ❒ CABANA LITE LAMI GLASS
- ❒ WHITE SAND LAMI GLASS
- ❒ CUSTOMER SUPPLIED INSERT
- ❒ DIVISION BARS

SHEET:	JOB #:	DRAWN BY: JL	DATE: 07/22/17	CHECKED BY: DL

PLEASE NOTE: "x" in the product code refers to the stile options - Standard T LINE = "T" ; SYSTEM 214 = "214"

Monaco - System Components

1 - Main Track
2 - Snap on Fascia
3 - Track End Cap
4 - Cushion Capture
5 - Roller
6 - Roller Bumper
7 - Adjusting Bolt
8 - Hanger Lock
9 - Rail Cap
10 - Floor Post
11 - Carrier Post

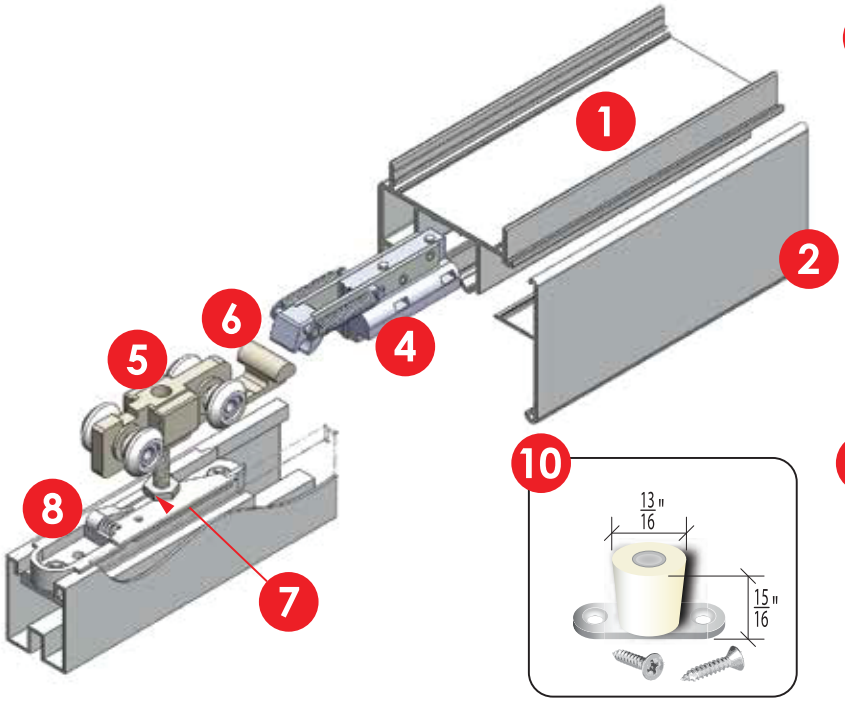

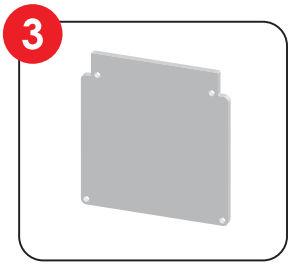

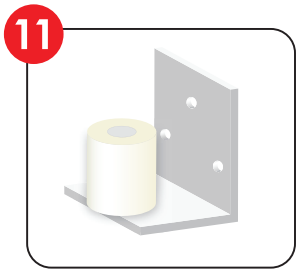

General

A - "T" Stile
B - System 214 Wide 2 1/4" Stile **
C - Sidelite Shoe
D - System 214 Lock
E - System 214 Edge Pull

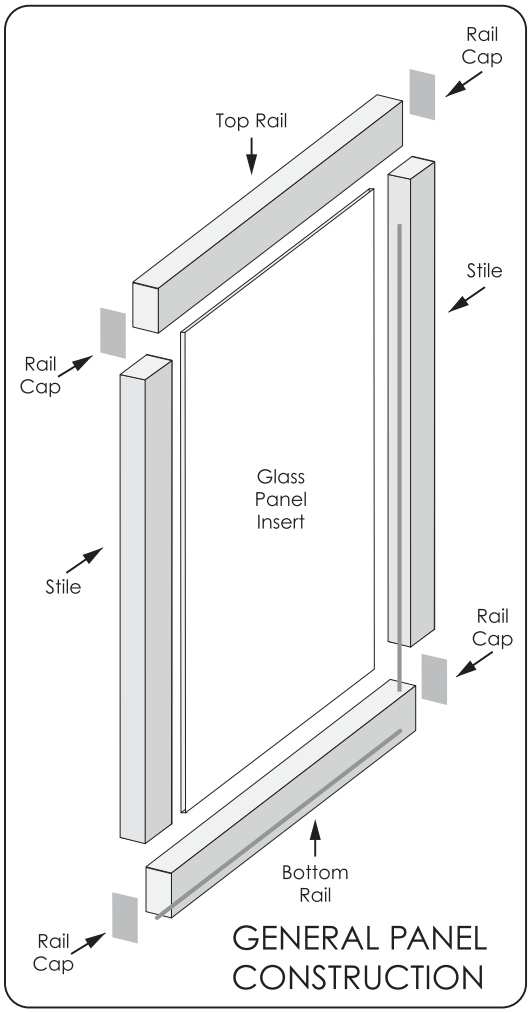

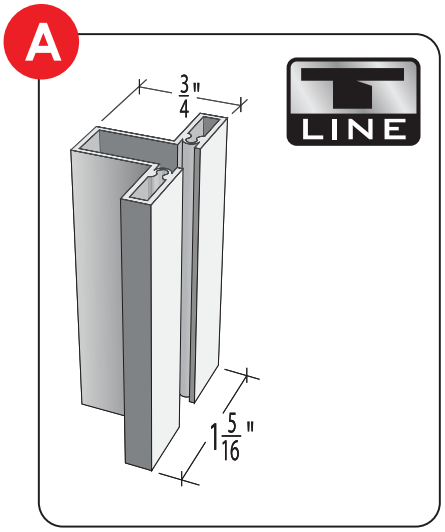

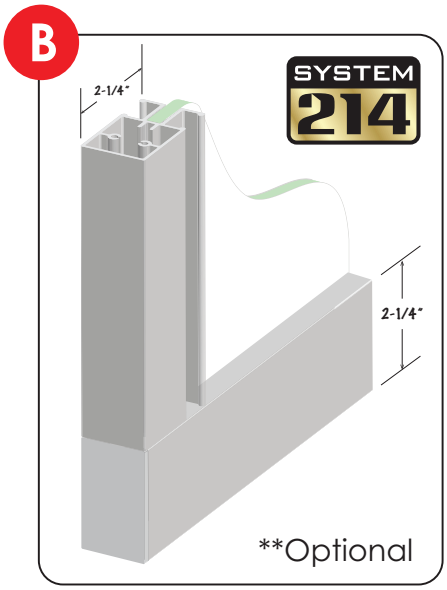

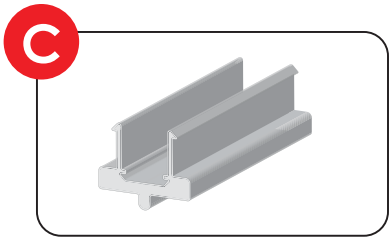

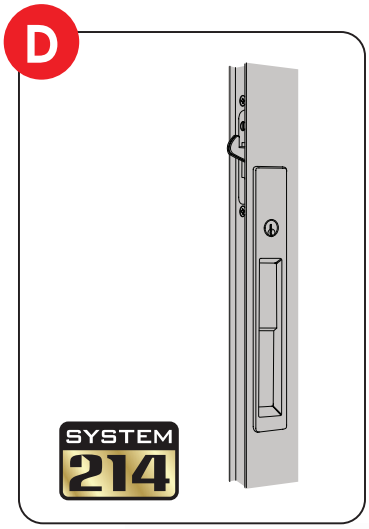

Riviera
rivieraglassdividers.com
T: 604.501.2588
F: 604.501.1608

MONACO Installation Instructions

Wall Slide

HORIZONTALLY FASTENED TOP TRACK - PLAN 4

IMPORTANT: Read these instructions completely before beginning any installation. Once the product is at the opening site and tools and parts are set up and ready to go, each panel should be able to be installed in 20 - 30 minutes.

A Install Top Track Main Portion

NOTE: Top of top track = panel height plus 3" (+/- 1/4") from finished floor. Additionally, panels should overlap side walls by 1 1/2" on each side. Refer to Wall Mount form at **www.rivieraglassdividers.com**

1. Measure track and using a power miter box (chop saw) trim both main track and fascia to length as required. Allow a minimum 1 1/2" overlap on each side wall when slider is in the fully closed position. You will also want to ensure that there is enough length of track for the slider to completely clear the opening when it is in the fully open position.
2. Position track on the wall to allow for wall overlap when slider is in the fully closed position.
3. Mounting screws **MUST** be located into solid backing and spaced at approximately 24" - 32" centres including a fastener at each end of the track. Mark drill locations on the inside of the fixed fascia and drill fastener holes using the bottom drill line provided. **Tip:** To aid in track levelling drill fastener holes slightly oversized (5/16") to fit the HEX drive screws provided.
4. Install cushion capture and rollers into track ensuring that the roller bumper faces the cushion capture hook. Level and mount the top track to the wall above opening.

DON'T INSTALL FASCIA AT THIS TIME

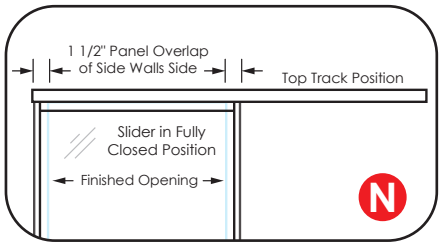

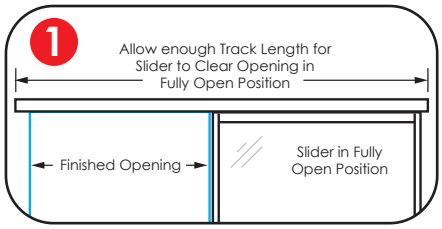

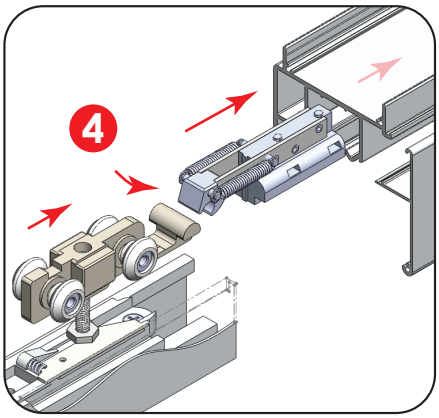

B Install Floor Post

5. Screw the FLOOR POST to the floor in front of the wall that the panel will slide over when open, so the leading EDGE of the post is 1/8" back from the vertical edge of the opening. The Post should be centred vertically under top roller track.

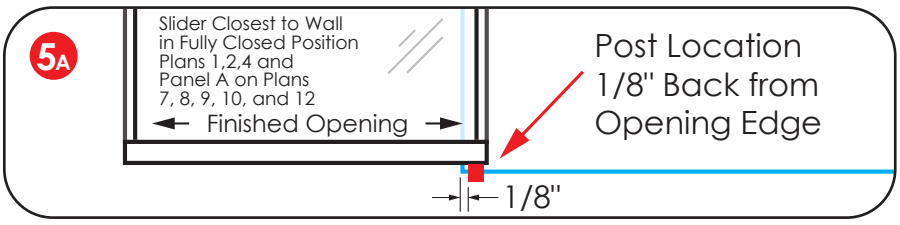

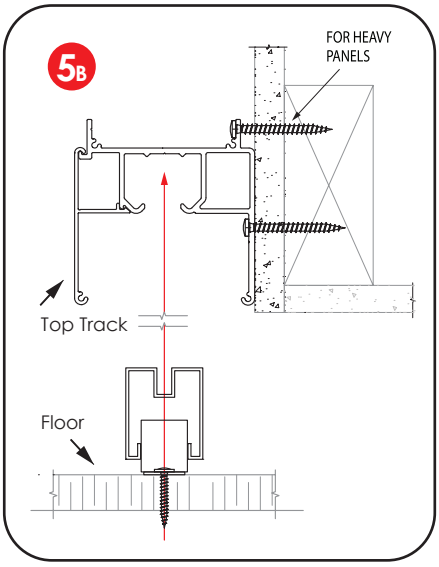

B Install Floor Post cont.

5.1 **ALTERNATE INSTALLATION:** If it is not desirable to screw into the floor, a CARRIER POST may be wall applied. Position as above however Carrier Post MUST be spaced 1/2" - 5/8" away from the Top Track mounting surface by fastening the Carrier Post to the baseboard or by using shims.

IMPORTANT NOTE: Sliding Panel Rail Cap should never come in contact with the Floor Post or Carrier Post. (See "**PANEL ADJUSTMENT**")

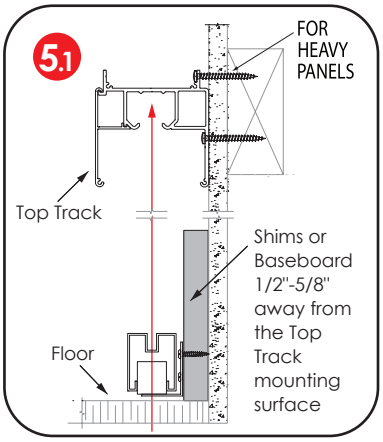

C Install the Panel

6 Ensure the Hanger Locks that are pre-installed in the panel rail are at the top of the panel(s).

SPECIAL NOTE: To achieve a panel stoping position in line with the end of the Cushion Capture assembly, the Roller Adjusting Bolt should engage the Hanger Lock spring 4 9/16" from the the end of the panel.

7 Set the panel rail over the floor or carrier post(s) at the floor.

8 Lift the panel(s) up and engage each roller adjusting bolt head into its hanger lock by pushing bolt against spring lock until it latches. Adjust roller bolt vertically using the combination wrench/screwdriver tool provided, to adjust floor clearance and vertically align panels with wall edge.

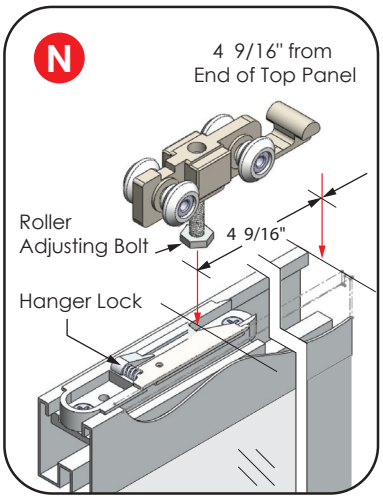

D Panel Adjustment

9 ***Adjust Cushion Capture and Hanger Lock horizontally such that the Bottom Rail Cap never comes in contact with the Floor or Carrier Posts.***

10 Panel stopping location can be fine tuned by loosening the two screws in the cushion capture mechanism and moving to desired position along the track.

11 Further adjustment can be achieved by adjusting the Hanger Lock position in the top rail. Loosen the two clamp screws using an 90 degree angled Philips screw driver.

12 Hook removable Fascia over main track and snap into place to top track.

13 Install track end caps to exposed track ends with the four #4 - 1/2" screws provided, using the wrench/screwdriver tool provided. (#0-Yellow Robertson drive tip)

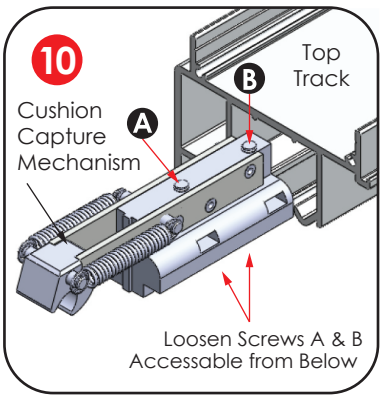

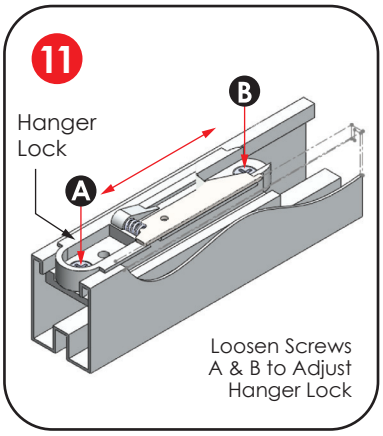

WARRANTY

Riviera Glass Dividers are warranted to be free of defects in material and workmanship for a period of one year. Product reported as defective is subject to inspection and validation by an authorized representative. Alliance Glass Doors Inc. will repair, replace or refund the original cost of the doors or parts, at it's option. Remedies do not include glass breakage by any cause, labour, installation costs, finishing costs, indirect or consequential damages.